DERBYSHIRE COUNTY COUNCIL

Briar Close HOP

Condition Survey

November 2018

FAITHFUL + GOULD

Document Status					
Revision	Date	Status or comment	Prepared by	Checked by	Authorised by
-	06.12.18	Issue	DB	SG	TA

Disclaimer

This document and its contents have been prepared and are intended solely for Derbyshire County Council's information and use in relation to the condition survey at Briar Close HOP.

Faithful+Gould assumes no responsibility to any other party in respect of or arising out of or in connection with this document and/or its contents.

Copyright

The copyright of this document is vested in Faithful+Gould. This document may not be reproduced in whole or in part without their express written permission.

Filepath

P:\GBNGB\FandG\General\DCC\HOP Survey\Briar Close

Contents

1.0 INTRODUCTION 4
2.0 CONDITIONS OF THE REPORT 5
3.0 INSPECTOR'S ADVISORY NOTES / INFORMATION 7
3.1 BUILDING 7
4.0 WRITTEN CONDITION REPORT 12
5.0 CONDITION DATA 16
6.0 APPENDICES 17

1.0 INTRODUCTION

1.1 CONDITION SURVEY

The survey has been produced to identify repairs and maintenance works to be costed, prioritised and planned. Condition surveys provide a systematic, uniform and objective basis for gathering information on the state of premises and should identify work necessary to bring premises up to a serviceable state of repair and to rectify breaches of legislation and health and safety regulations.

The following criteria for the condition survey has been adopted for Briar Close HOP -

• An estimate should be made at the time of assessment of the cost of repairing or renewing a defective element. These costs should be for bringing the element up to good condition.

• Costs within the survey data sheet include the material and labour cost only, as it is not known at this stage how individual repair items will be compiled in to projects (Raw cost data).

• A project budget cost exercise is included to take the Raw cost data and build it in to predicted project budgets, we have included for providing three project scenarios. We would anticipate typical project scenarios would include full refurbishment, bedroom refurbishment (with associate M&E items) and external fabric repairs.

• Costs should NOT include: -

- For upgrading specifications to current standards, except where the existing specification is no longer available or would breach legislation.
- Minor day-to-day maintenance (e.g. replacement of locks, broken glass, tap washers, easing doors etc.)
- Minor routine works (e.g. inspection, testing, cleaning, servicing, adjusting, overhauling etc.)

1.2 SCOPE OF SURVEY

This condition survey states the maintenance need of the property and site at the time of the survey, together with the major maintenance works recommended over the following twenty-five years. It is suggested that full condition surveys are carried out every five years with updating inspections every three years.

Items detailed within the report have been included from the visual Condition Survey inspection.

The following items are not included: -

- Defects that are hidden, concealed, inaccessible, safe working / access is unavailable, or specialist testing would be required to identify faults.
- Items that are in satisfactory condition and have no identified maintenance requirement.
- Items that fall outside the time scales covered by this report.

1.3 SUMMARY OF ESTIMATED COSTS

This summarises the findings of the condition survey and includes the recommended priorities for the works, together with responsibilities where appropriate.

2.0 CONDITIONS OF THE REPORT

This report is presented on the basis of the following conditions: -

2.1 IMPROVEMENTS

We have not allowed for any refurbishment, betterment or improvements to the existing as built standard, unless the item breaches current legislation.

2.2 STRUCTURE

The Condition Survey is not intended as a full structural survey, but a structural survey has been undertaken to the roof structure of the two-storey building and the report can be found in Appendix E. No load tests or assessment of the actual loadings have been made.

No investigations have been made to ascertain the type or condition of the foundations or that no high alumina cement concrete or calcium chloride additive was used in the construction, unless specifically noted.

An inspection of the roof covering, roof voids, drainage and service ducts, etc. has been carried out, where safe access was available.

We have not inspected parts of the structure which were covered or inaccessible and we are, therefore, unable to report that such parts are structurally sound, free from rot, beetle or other defects.

Every reasonable effort has been made to ensure that the information contained in this survey report is accurate and as comprehensive as was practicable at the time of preparation, given the unfamiliarity of the site. Due to the nature of this non-destructive Condition Survey, it is not reasonably practicable to categorically state whether there are any hidden/concealed defects, or indeed where no access is available there are any defects. We cannot therefore accept liability for loss, injury, damage or penalty caused by omissions or errors contained in this report. The report does not waive the responsibility of the building manager / Departmental Director or other persons pertaining to have responsibilities for these premises.

2.3 ASBESTOS

Where damaged asbestos products have been noticed, these have been noted in the survey. However, this is not an asbestos survey and is based on no more than obvious visual information. No testing of materials has taken place, nor has any construction been opened up for inspection. It is, therefore, possible that the building contains asbestos products not described in this report. Whilst experts generally advise that asbestos is not hazardous unless disturbed, it is recommended that an asbestos risk assessment be carried out before undertaking any building operations which will disturb existing materials.

2.4 FIRE PRECAUTIONS

The survey has considered the general resistance of the building to fire, the adequacy of means of escape and alarm systems. The survey has not inspected in detail the fire compartmentation of the building(s) and the requirements of the Fire Prevention Officer, as these are items dealt with by others and fall outside the scope of our report.

2.5 SERVICES

THIS INSPECTION DOES NOT REPLACE THE NEED TO CARRY OUT ALL STATUTORY TESTS REQUIRED TO MEET BUILDING AND USAGE COMPLIANCE.

Electrical

The electrical services to the building(s) identified within this report have been visually inspected only, i.e. no covers have been removed, nor has any circuit testing been carried out. This visual inspection does not replace the need for a full electrical periodic test and inspection, which should be carried out to comply with, and to the relevant time frequency identified within table 2.1.5 (732-01-01), of BS7671.

Fire alarms, emergency lighting, lifts etc. to the building(s) identified within this report again have been visually inspected only. This visual inspection does not replace the need for a full test and inspection, which should be carried out to comply with, and to the relevant time frequency identified by, the relevant British Standard and/or HSE requirement.

Defects identified within all reports should be rectified within the timescales identified within each report.

Mechanical

All mechanical works identified within this survey shall be carried out in strict accordance with current Legislation and Approved Codes of Practice and Guidance that are relevant to the works being carried out.

Works shall be carried out in strict accordance with the Health and Safety at Work Act 1974.

Before any work is carried out it is imperative that the On-Site Asbestos Log Book is consulted and compiled upon completion of works.

2.6 ACOUSTICS

No investigation of the building's acoustic properties has taken place.

2.7 EQUIPMENT

Loose equipment within the buildings or external fixed equipment has not been included in the survey.

3.0 INSPECTOR'S ADVISORY NOTES / INFORMATION

3.1 BUILDING

External Decoration

Within the five-year timescale of the survey, all painted / stained / treated surfaces should be prepared and redecorated after any necessary repairs, whilst all self-finished surfaces should be cleaned down.

Internal Decoration

All areas require redecoration within the five-year timescale of the survey.

"Health" areas such as toilets, kitchens, changing rooms, domestic science rooms, medical rooms, showers etc., should ideally be redecorated on a three-year maximum cycle for obvious hygiene reasons.

The surface finishes of ceilings, walls, fittings and fixtures in escape corridors, staircase enclosures, circulation areas and common areas should be redecorated with Class 0 products to reduce the surface spread of flame in the event of a fire. Surfaces must be Class 'O' to comply with Approved Document 'B' of the Building Regulations.

Rainwater Goods

All rainwater goods / gutters / outlets / hopper heads / discharge shoes etc., should be cleaned out on a minimum yearly basis. This will ensure rapid and efficient collection and dispersal of rainwater from the building envelope, to minimise damage by rainwater ingress.

Flat Roof Areas

All 'flat' and very low pitch roof areas should also be cleaned off on a minimum yearly basis, to prevent damage to the roof covering and blockage of roof outlets. All debris and rubbish should be comprehensively collected and removed, which may include old building materials, balls, bottles, drinks tins, plastic bags, leaf and branch litter, glass, nails/screws, dead birds, paper etc.

Fire Signage/Warning Signage

Where the Building Inspectors believe the 'Fire Signage' is inadequate, and/or emergency exit routes are ambiguous and unclear, costings for additional signage will be included in the report. Emergency exit routes and doors should be CLEARLY MARKED.

Where other assorted warning signage is considered necessary, the Building Inspectors will also include for that. All signage is to comply with the Health and Safety (Safety Signs and Signals) Regulations 1996.

Emergency Egress

Where internal doors would benefit from the installation of a minimum 30-minute fire resisting vision panel, and/or thumb-turn to the internal face of the door to over-ride the key operated mortice lock, the Building Inspectors will include for the same. These measures are to allow rapid detection of a fire or other emergency and to aid rescue by the emergency services and/or rapid evacuation of the building in the event of an emergency.

In addition, various pad-bolts, barrel bolts, hasp and staples, supplementary locking devices/locks fitted to doors will be identified for removal to prevent the risk of persons being accidentally locked or trapped within these rooms.

Where inappropriate ironmongery/door furniture is fitted to external final exit doors, it will be identified for removal and replacement with suitable emergency exit quick release panic ironmongery.

Work at Height Regulations 2005

To comply with this legislation the Building Inspectors will include for the following, where applicable: -

a) Provide a roof void access walkway, complete with handrails to both sides, to the whole of the roof area, including electric lighting and new hinged loft trap with retractable loft ladder where appropriate.

b) Fixed permanent access ladders complete with safety hoops and alighting platform, complete with safety balustrade etc., to gain access to remote/high level fixed plant, tank rooms, plant rooms and the like.

c) Permanent edge protection/safety balustrade to the edge of all flat or low pitch roofs, or safe method for working. Where appropriate, fixed lifelines/fall arrest system will be considered for pitched roof situations.

3.2 ELECTRICAL (Related to electrical survey only)

The electrical installation should be maintained in accordance with, and any alterations or additions should comply with, the current edition of the IEE WIRING REGULATIONS (BS 7671) and the ELECTRICITY at WORK REGULATIONS 1989.

A full test and inspection of the electrical installation, to the prescribed format of the IEE Regulations, should be carried out in all buildings to the recommended frequency as detailed within BS7671. It is also recommended that all portable appliances (including extension cables/sockets) are tested at regular intervals.

All electrical switchgear and distribution boards etc., fire alarm break glasses and emergency stop buttons in workshops should have a clear access at all times. Switch rooms and switchgear cupboards should not be used for storage.

Fire alarm systems should be maintained and tested at regular intervals in accordance with, and any alterations or additions should comply with, the current edition of BS 5839 Part 1.

Emergency lighting systems should be maintained and tested at regular intervals in accordance with, and any alterations or additions should comply with, the current edition of BS 5266 Part 1.

3.3 MECHANICAL (Related to mechanical survey only)

All gas appliances and installation works shall be carried out in strict accordance with the Approved Code of Practice Document, Gas Safety (Installation and Use) Regulations 1998.

All works relating to the hot and cold water system shall be carried out in strict accordance with the 2nd Edition of the Water Regulations Guide, and also in full compliance with the Approved Code of Practice Document L8 “The Control of Legionella within Hot and Cold Water Systems”.

A further requirement of this document is that all water systems shall have a Water Services Risk Assessment carried out upon them to assess the risk of the system harbouring the Legionella bacteria. The findings of the assessment should be fully implemented.

All mechanical works identified within this report should be carried out in strict accordance with current and relevant Approved Codes of Practice, and also in compliance with current Legislation.

3.4 KEY TO SURVEY TYPE

B - Building

E - Electrical Services

M - Mechanical Services

Key to Condition Grading/Priority Grading

Condition Grading

This is the overall condition of each element of the building.

- **Grade A** Good. Performing as intended and operating efficiently.
- **Grade B** Satisfactory. Performing as intended but exhibiting minor deterioration.
- **Grade C** Poor. Exhibiting major defects and/or not operating as intended.
- **Grade D** Failed. Life expired and/or serious risk of imminent failure.

Examples of Application of Condition Classification

Example 1 - Flat Roof

Condition Grade	
Watertight, no visible defects	**A**
Reasonably sound, only routine maintenance required.	**B**
Significant deterioration, subject to leaking.	**C**
Extensive problems, severe water penetration, cannot be maintained effectively	**D**

Example 2 - Heating Boiler

Condition Grade	
Good working order.	**A**
Operating efficiently, some minor repairs anticipated.	**B**
Subject to breakdown.	**C**
Permanent failure probable.	**D**

3.5 PRIORITY GRADING

Once the condition of premises has been assessed, priorities are allocated according to the seriousness of the condition revealed and the urgency associated with any breaches of legislation. This has particular regard to the possible consequences of deferment.

The following priority grades are in the context of a five-year accounting period:

- **Priority 1** Urgent work that will prevent immediate closure of premises and/or address an immediate high risk to the health and safety of occupants and/or remedy a serious breach of legislation.
- **Priority 2** Essential work required within two years that will prevent serious deterioration of the fabric or services and/or address a medium risk to the health and safety of occupants and/or remedy a less serious breach of legislation.
- **Priority 3** Desirable work required within three to five years that will prevent deterioration of the fabric or services and/or address a low risk to the health and safety or occupants and/or remedy a minor breach of legislation.
- **Priority 4** Long term work required within five to ten-year planning period that will prevent deterioration of the fabric or services.
- **Priority 5** Long term life cycle or cyclical replacement within a ten to fifteen-year replacement
- **Priority 6** Long term life cycle or cyclical replacement within a fifteen to twenty-five-year replacement

3.6 REPAIR TYPE CATEGORISATION

In addition to the condition and priority rating repair items are to be identified with repair type categorisation where condition alone is not the only recommendation for repair.

- **E** Environmental
- **F** Fire Precaution
- **G** Consequential risk
- **H** Health and Safety
- **I** Further Investigation
- **L** Loss of Service
- **Q** Energy
- **R** Recommendation
- **S** Security

3.7 ADDITIONAL GRADING

The following grading has been applied by Derbyshire County Council to enable further prioritisation in relation to:

Operational Effect Grading

User Effect Priority 1	If the element fails, it will have a significant effect on the users of the building.
User Effect Priority 2	If the element fails, it will have an effect on the users of the building.
User Effect Priority 3	If the element fails, it will have little or no effect on the users of the building.

Technical Effect Grading

User Effect Priority 1	If the element fails, it will have a significant effect on the users of the building.
User Effect Priority 2	If the element fails, it will have an effect on the users of the building.
User Effect Priority 3	If the element fails, it will have little or no effect on the users of the building.

H&S Effect Grading

User Effect Priority 1	If the element fails, it will have a significant effect on the users of the building.
User Effect Priority 2	If the element fails, it will have an effect on the users of the building.
User Effect Priority 3	If the element fails, it will have little or no effect on the users of the building.

4.0 CONDITION REPORT

4.1 Site

Briar Close HOP is a 40-bedroom care home situated in Borrowash, to the South East of the county. The surrounding area comprises residential properties, public space and local amenities.

The building is largely of single storey construction accommodating bedrooms, bathrooms, lounges, dining, staff and circulation areas to the ground floor with a small section of two storey comprising two flats.

The building is a hub and spoke design with four accommodation wings positioned around a central hub housing core services such as the offices and kitchen.

The site has limited onsite parking adjacent the main entrance, having 1no marked disabled bay and the remaining bays unmarked, but suitable for approximately 5 cars, with additional on street parking available.

There is a service road to the east of the building providing access for deliveries.

To the south and half the east and west elevations of the site are the garden areas for the residents.

Generally, the site is provided with perimeter footpaths around the building and soft landscaped infills.

4.2 Main Block

Fabric

The building is predominately single storey, with two flats on the first floor. It is thought to be early 1970's construction and was occupied as a residential care home at the time of the survey. It has duo pitched roof over the rooms, with a combination of mono pitched and flat roofs elsewhere with clay brick walls, patent glazing to north lights, PVCu double glazed windows and doors to the remaining elevations.

Condition

Roofs

The building has a duo pitch timber roof over the two-storey section and a combination of mono pitched roofs all with assumed timber trussed rafters and assumed timber deck flat roofs elsewhere with rooflights positioned to provide natural light and ventilation.

The flat roofs appear to have mineral felt covering with polystyrene slab insulation and chippings as ballast, presumably as a retrospective insulation method. All flat roofs are of similar construction and assumed to be around 20 years old and the end of their useable life, which is confirmed with the amount of patch repairs evident throughout the building and replacement should be considered within the next 1-2 years.

The flat roofs have single skin polycarbonate pyramid rooflights throughout, which are now aged and in need of replacement with the flat roof covering.

Pitched roofs are covered with single lap concrete interlocking tiles which, most likely are original, one pitch over the kitchen has had the tiles replaced with mineral felt. The roof finish is seemingly weathertight, but nearing the end of its useable lifespan, and as such replacement should be considered over the next 10 years. The roof pitches appeared predominately flat with no major defects evident to the tiles, but it is likely the bituminous underfelt has deteriorated in places, which would provide no resistance to water ingress.

See structural engineers report for information relating to bracing for the trussed rafters over the two-storey building.

Rainwater Goods

The eaves to the pitched roofs have concrete gutters. The gutters are formed with concrete sections and some have spalling evident or have been displaced to incorrect falls. The gutters have been retrospectively lined with felt, presumably as a repair for previous leaking. The site management complain of frequent leaking and leaf litter has filled some sections impeding flow. Replacement of the concrete guttering is expensive and disruptive so as a minimum the gutters should be relined within the next 2 years with a quality cold applied liquid gutter lining system.

Flat roofs are provided with aluminium gutters and downpipes which are now aged and in places, to incorrect falls. It is recommended that the gutters and downpipes are renewed in conjunction with the flat roofs.

External Walls

The superstructure is formed with cavity walls, comprising of two courses of engineering bricks below DPC level and below each window, a bituminous felt DPC and an external skin of clay brickwork with cement mortar pointing. The cavity is assumed to be 100mm, which is likely to be uninsulated, with a blockwork inner leaf. Between the ground and first floor there is the exposed solid floor slab edge, which is exhibits only hairline cracks. Over the windows are pre-cast concrete filler panels, many with unfilled joints which could allow water ingress.

Generally, the external walls were performing as intended for a building of this age and construction, typically exhibiting weathering, minor thermal cracking at openings, staining of brickwork and minor breeches of the DPC. There is a survey tag on a wall near the main entrance above a stepped crack, as the cracking terminates above he DPC course and appears to be due to horizontal movement. We have not been provided with any further information relating to the issue.

Areas of roof gables and north lights have PVCu cladding fitted. Other than typical weathering, UV fading and dirt staining there appeared no obvious defects and are likely to require replacement at the same time as the windows.

Windows and External Doors

Windows throughout the building have been replaced with modern PVCu units and generally found to be in a generally good condition, with no major issues reported by the site, other than water ingress to 0126CA. According to the site rainwater enters the building over the top of the PVCu windows and saturates the carpets. This is suspected to be a combination of lack of weatherproof seals, poor guttering and detailing.

The north lights have single glazed louvred windows. These are now aged, with upstands less than 150mm and due for replacement within the next 2 years.

The external doors to the site are double glazed PVCu and the final exit doors are fitted with panic bars which do not contrast to the door and difficult for persons with visual impairment to distinguish. The clear width on the final exit doors are 760mm.

Generally, the doors and windows are in a fair condition, typically with some UV fading, general dirt stains with replacements being required in around 10 years.

<u>Interior</u>

Ceilings

The ceilings throughout the property are predominately plasterboard with a paint finish. The living rooms have the underside of the pitch lined with T&G timber boards, these are not class 0 rated and a it is recommended to renew with a product to limit the spread of flame.

Floors and stairs

The ground floor appears to be a concrete ground bearing slab, whilst the first-floor structure is a suspended reinforced concrete slab. Floor finishes throughout the building depended on location and use. Typically, bathrooms, toilets, wet areas and the kitchen had non-slip vinyl, as did some bedrooms, whilst the remaining areas received a carpet finish. There appeared no obvious defects to the floor structures, however the floor finishes were in various states of condition ranging from good condition and performing as intended to poor or life expired.

Internal Walls and Partitions

Internal walls were found to be solid masonry with a two coats plaster finish. All walls appeared in a fair condition, with only minor impact damage and scuffs defacing the finish.

Internal Doors

The doors throughout the building are generally solid core timber doorsets, though depending on position and use may or may not be fire rated doorsets. Bathrooms, toilets for example are not fire rated due to the low risk of fire occurring in these rooms, however kitchenettes, living rooms, bedrooms, stores etc are all fire rated, some with Georgian wired vision panels and all with fire and smoke seals. The circulation areas have 1.5 leaf fire doorsets for compartmentation with glazed vision panels in the primary leaf.

All key doorsets e.g bedrooms, circulation, living rooms etc have overhead door closers, which hold open to provide unrestricted movement around the building, but are designed on activation of the fire alarm to release to provide fire protection.

Except for the circulation area fire doorsets which are fairly recently installed and expected to have a remaining life of around 15 years, all the other doorsets appear to be original construction and are now aged, though they appear to be still functional. All are showing typical wear and scuffs associated with products of this age, construction and use and are likely to require replacement within the next 5 years.

The survey assumes all fire doors are currently functioning as fire doors, and of a suitable construction to be used as fire doorsets. It identifies only obvious defects or general wear and tear, but cannot state if they meet current fire performance requirements, if this is required a separate specialist survey should be undertaken.

Decorations

The building is generally provided with textured paint to ceilings, wallpaper or emulsion paint on walls, dependant on location and use and gloss painted woodwork with wood stain to doors.

The decorations are generally in a good condition, but typically for the use of the building there are areas such as wall corners and door jambs which are scuffed.

Sanitary Ware

Three of the four wings had a bathroom, which had wash hand basins and a bath with powered seat assistance, though some baths were newer than others.

Whilst the bathrooms and toilets may have received redecorations recently the space available in the bathrooms and toilets are below recommended requirements of BS8300-2:2018, which coupled with narrow doors provide restricted spaces in which to manoeuvre.

The bathrooms to the first-floor flats are aged, poor condition and life expired.

Fixture and fittings

The bedrooms are populated with standard timber storage cupboards, mirrors and shelves. Whilst the items are likely to be original and therefore could be considered dated, their condition is considered acceptable.

The staff areas are populated with further storage facilities, desks etc and their condition is also considered dated but acceptable.

4.3 External Areas

The site has tarmac car parking near the front entrance with a single disabled bay a marked area for ambulances, the remaining parking for three cars was unmarked. There is a tarmac vehicle access road for kitchen deliveries on the left-hand side and all were in a fair condition.

Throughout the site there are tarmac paths which interlink recreational areas, landscaped areas and access roads.

Generally, the footpaths are in a reasonable condition, though with many of them around 1.2m wide they could pose problems with residents passing each other, especially if any are using mobility aids.

The rear boundary is formed with hedgerows and secured with timber fence and gates to either side. The gates on the timber fencing do not have any form of escape furniture and in the event of an emergency evacuation have the potential to retain the occupants in an enclosed area, rather than allowing escape to a place of relative safety.

The external recreation areas are accessed from the main building via PVCu exit doors. The sloped ramps are formed with blue engineering bricks and whilst the rise is only about 150mm, the bricks have the potential when wet to be slippery underfoot, the ramp has no landing so potentially awkward for any person to negotiate is unsteady on their feet or in a wheelchair. To compound the issue there are very few handrails to assist when using the ramps, this needs addressing site wide.

The recreational areas are generally small, cluttered and in places have gravel which can make a person with mobility issues unsteady on their feet. Its recommended to review all the recreational areas and remodel using more space and with materials to provide steady footing, good contrast and non-slip.

4.4 Summary of fabric

The building and external areas are generally dated but acceptable, with the below items of main concern.

The flat roof coverings are life expired and in need of replacement, the timber roof trusses to the two-store building requires additional bracing, which is illustrated in the structural engineer's report. The building itself exhibits typical weathering to brickwork and mortar with some minor cracking predominately in positions associated with thermal movement logging and monitoring overtime as a precautionary measure may want to be considered.

The external recreational areas, whilst provided do not make the most of the space available on the site and utilise materials underfoot which can make a person unsteady on their feet. The external access and egress from the building require review, many are steep ramps with no landing or handrails and some use engineering bricks which can be slippery when wet. The external horizontal evacuation routes from the building of the rear is poor, the fencing and gates prevent escape to a place of relative safety. The external fire escape routes do not have external lighting, and whilst most drills and emergencies require movement of residents to other wings or areas, should they need to be evacuated in the night the route is unlit.

Whilst the building is generally well decorated the contrast between material colours in places is thought to not achieve the 30 points LRV difference required for visually impaired persons. Internally the building has poor fire signage and signs are often positioned in a position that when the corridor doors close on activation of the alarm, signage directing would not be visible. The bathrooms and toilets, whilst compliant with the regulations as built prior to March 2002 are well below the current required dimensions, and consideration for adapting the internal envelope to provide more space especially in the bathrooms would be advisable.

5.0 CONDITION DATA

6.0 APPENDICES

Appendix A	-	Facet survey
Appendix B	-	Building Floor Plan Drawings and Room Data Sheets
Appendix C	-	Building Photographs
Appendix D	-	M&E report
Appendix E	-	Structural report
Appendix F	-	Cost Data & Cost Summary Sheets

Appendix A

Facet Survey

6 Facet Summary

Survey Date:	6th November 2018
Property:	Briar Close HOP
Building:	1
Block:	1
Client Organisation:	Derbyshire County Council
Overall Volume m3:	-
Overall area m2:	Approx 1300m2
Number of floors:	2

		Rating
Facet 1	Physical Condition	**B**
Facet 2	Functional Suitability	**C**
Facet 3	Space Utilisation	**F**
Facet 4	Quality	**B/C**
Facet 5	Fire, Health and Safety	**C**
Facet 6	Environmental Management	**E**

Summary Overview

Functional Suitability:	The functonality of the building as a care home is considered unacceptable when compared to current standards. The design of the building in the 1970's was specifically tailored for its use, however some areas such as bedrooms, toilets and circulation etc fall short of the current requirements but the regulations require that if it didnt meet the requirements before 31st March 2002 it is deemed acceptable.
Space Utilisation:	The building had specific purposes related to each room i.e. kitchen, lounge, residential, so the impression is it was well utilised as a care home. The second floor flats were both in poor condition and unsuitable for use. The flats should be considered as administration or office space, though both would require a full refurbishment prior to use as such.
Quality:	The quality of the site is generally acceptable, reasonably decorated but dated and would benefit from a programme of modernisation internally. Externally the recreational areas should be reviewed and more use made of the external space available along with the access and egress ramps which require remodelling.
Statutory Compliance:	From a fire management perspective the building appears to be managed well, with all records up to date, showing regular drills and testing of systems apparatus etc. Fire exit signage around the building is poor, it requires a review and to be updated. and the the standard of fire alarm has been questioned (see associated mechanical and electrical report). Ventilation to the sluice rooms and staff toilet is inadequate. The emergency lighting and external lighting provision needs to be reviewed and updated. The kitchen needs a gas shut off valve. Replace the fire alarm system to bring the system up to the current standards of BS5839. Upgrade the corridor escape signage for maintained illuminated signs at all fire exits and changes in direction. Install additional emergency lighting to external escape routes where the escape route is tight to the side of the building with no street lights to illuminate the route. Mechanical and electrial items that require attention, are as follows: The fire alarm system needs updating to BS5839 level P1 - L1 + M, this shall include flashing beacons throughout for persons with hearing impairments and all necessary interfaces with door hold open devices, gas valves, etc. It requires Nurse call systems to all bedrooms toilets, bathrooms, shower rooms, medical rooms, lounges, and communal areas with central and local systems of being able to identify which room the alarm has been activated. Hearing loops need to be provided to specific areas around the building such as lounges, office areas dining areas and communal areas. Emergency lighting needs updating to all rooms including bedrooms. Illuminated exit signage is required throughout the building to ensure that all persons can clearly identify the escape routes. Door guard/security system should be updated to alert staff should an external door is opened. The ramps to the exit doors around the building are steep and the brick surfaces on some have the potential to be slippery underfoot, there are no landings and insufficient handrails.
Environmental Management:	The EPC rating for the site is E which could be improved upon. Even though the building has double-glazed window and door units and new boilers, other measures could be taken in the form of improving the amount of insulation in the roof space, the installation of solar and PV tiles and the replacement of fluorescent tubes with LED light fittings.

Statutory Compliance Costs:	**£68,500.00**

(Contraventions of statutory compliance: immediate action recommended)

Items of immediate concern

ITEM	DESCRIPTION
Fire Alarm	The fire alarm system needs updating to BS5839 level P1 - L1 + M, this shall include flashing beacons throughout for persons with hearing impairments and all necessary interfaces with door hold open devices, gas valves, etc.

Functional Suitability Survey

FAITHFUL GOULD

Survey Date:	6th November 2018	Organisation/Name	Derbyshire County Council
Property:	Briar Close HOP	Overall Volume:	-
Building:	1	Overall area	1300m2
Block:	1	Number of floors	2

CLASSIFICATION CATEGORY:

A	Very satisfactory, no change needed
B	Satisfactory, minor change needed
C	Not satisfactory, major change needed
D	Unacceptable in present condition
X	Supplementary rating to "C" or "D", to indicate that nothing but a total rebuild or relocation will suffice, i.e. improvements are either impractical or too expensive.

1 DETAILED ASSESSMENT

1.1	INTERNAL SPACE RELATIONSHIPS (STANDARD 20 & 23	RANK	COMMENTS (if C or D)
a	20.1 4.1m2 communcal space per service user	B	Compliant as constructed prior to 31st March 2002.
b	20.2 communal space provides variety activities and dinning space for all users and smoke free sitting room	B	
c	20.3 Outdoor space is provided and accessible for all, with seating and deisgn to meet all needs	C	Access and egress could be improved, external spaces uses limited areas and a variety of materials which could provide a trip hazard.
d	Outdoor space accessible/designed to meet user requirements	C	Narrow paths around site
e	Where intermediate care is provided, dedicated space is available for this services group	B	
f	Lighting in communcal areas is domestic in character, sufficiently brightand suitablity positioned for activities	C	Suitable for use, could be improved on.
g	23.1 - Single bedrooms provide 12m2 post 2002 or 10m2 existing usuable floor area pre 2002	C	Bedrooms undersized compared with current requirements, but compliant because they were the same as prior to 31st March 2002.
h	Single rooms accomodating wheelchairs are at least 12m2	C	Bedrooms undersized compared with current requirements, but compliant because they were the same as prior to 31st March 2002.
i	Bedroom dimension/layout allow access to either side bed	C	Bedrooms undersized but beds on wheels to provide access either side.
j	Shared bedrooms rooms at least 16m2	C	Bedrooms undersized compared with current requirements, but compliant because they were the same as prior to 31st March 2002.
h	80% room single	A	

	1.2 SUPPORT FACILITIES (standard 21)	RANK	COMMENTS (if C or D)
a	Accessible toilets for users, clearly marked and close to communal areas	B	Two toilets per 10 residents. In centralised areas of each wing.
b	Ratio 1 assisted bath/shower to 8 users	C	1 bathroom per 10 not 8
c	Each user has a toilet close to private accomodation	B	No ensuite facility
d	Ensuite to all post 2002 homes	NA	
e	Ensuite facilities should be accessible for wheelchair users	C	No en-suite facilities available
f	Sluices must be seprate from WC/bathing facility.	A	

	1.3 LOCATION and LAYOUT (STANDARD 19)	RANK	COMMENTS (if C or D)
a	19.1 Is the layout of the home suitable	B	
b	Routine maintenace up to date and records kept.	A	
c	Grounds clean and tidy	B	leaves and moss to some footpaths
d	19.4 Physical environment compliance	B	
e	Complies with fire and environmetal legislation	C	Fire alarm requires upgrading
f	Use of CCTV restricted to entrance	C	No CCTV

2 ASSESSMENT OF OVERALL EFFECTIVENESS C

3 ADDITIONAL COMMENTS: None

Space Utilisation Survey

Survey Date:	6th November 2018	Organisation/Name	Derbyshire County Council
Property:	Briar Close HOP	Overall Volume:	-
Building:	1	Overall area	Approx 1300m2
Block:	1	Number of floors	2

E	EMPTY - empty or grossly-under used at all times (excluding temp closure)
Y	UNDER-USED - generally underused; utilisation could be significantly increased
F	FULLY USED - a satisfactory level of utilisation
O	OVERCROWDED - overcrowded, over loaded and facilities generally over stretched.

1 CURRENT USE

How intensively is the space being used at time of survey?

List below any rooms or areas within the dept. / facility not used to optimum capacity

How efficient is the existing space?

The nature of the building and the buildings design uses the space effectively for a building constructed pre 2002. There are 4nr residential 'wings' each with private bedrooms, lounge area and WC's and bathrooms. There is also a central area which houses the offices and kitchen with flats above.
The two flats are located on the first floor and both are dilapidated and used only for storage. It could be argued that this is under-utilised and that it could be more useful as offices, freeing up space on the ground for for the rooms to be refurbished to create further residential suites etc however both flats require full refurbishment prior to doing so.
During the survey the site had 38 of the 40 bedrooms in use, with the remaining two being redecorated for use once completed."

2 USE OVER TIME

How does usage vary over time (that is, over a working day or week)

	AM	PM
Monday	-	-
Tuesday	-	-
Wednesday	-	-
Thursday	-	-
Friday	-	-
Saturday	-	-
Sunday	-	-

All

Weekday

Weekend

Other comment

N/A

3 OVERALL ASSESSMENT

Identify the general category into which the dept. / facility falls into category:

F

Quality Survey

Survey Date:	6th November 2018	Organisation/Name	Derbyshire County Council
Property:	Briar Close HOP	Overall Volume:	-
Building:	1	Overall area	Approx 1300m2
Block:	1	Number of floors	2

CLASSIFICATION INDEX

A	As new (last 2 years) and can be expected to perform adequately over its design life
B	Sound, operationally safe and exhibits only minor deteriorations
B/C	Currently in B but may fall to C within 5 years
C	Operational but major repair or replacement may be needed soon
D	Runs a serious risk of imminent breakdown
X	Applied to "C" or "D" ratings (i.e.. Cx or Dx) indicating that nothing other than a total rebuild or relocation will suffice (improvements are either impractical or too expensive)

Amenity		
	RANKING	**General comments**
First impressions of entrance/reception areas are welcoming?	B/C	Dated but functional
Attractive Reception and resident areas?	B/C	Dated but functional
Privacy and dignity issue have been addressed?	B	Private rooms for each resident throughout
Overall comfort and entertainment for residents?	B	Social rooms available on each block
Toilet facilities are well Provided?	B	Toilet facilities are available for each block but not en-suite for each room
Appropriate Storage Provision has been made?	B	Wardrobe and drawers available in each room. Staff have roms dedicated for storage.
Disabled users are catered for?	C	Accessible toilets available for each block, only 1nr disabled accessible toilet in the building.
Appropriate facilities are provided for visitors?	B	WC available for staff and visitors
Seating and lounge areas are sufficient?	B	Each wing has lounge areas are in place for each block and a larger lounge area near the mnain entrance.
Appropriate safety and security measures are in place?	B	See associated mechanical and electrical report. Inadequate internal emergency lighting & external lighting along escape routes and seating areas.
Suitable signage is visible, legible and consistent?	C	A fire signage audit should be undertaken as signage is generally poor throughout the building.
Adequate dining facilities?	B	Each wing has a dining area.
Adequate refreshment facilities?	B	Each dining room has a kitchenette for making hot and cold drinks.

Comfort engineering		
Artificial lighting enhances overall design?	C	Review of lighting and controls throughout the site required.
Is the heating/cooling system sufficient and useable?	C	The heating system and controls is aged, requiring work, and recommended for renewal in 3-5 years.
Is the ventilation system sufficient and useable?	C	Ventilation to numerous rooms require upgrading.
Acoustic privacy is achieved?	B	The building internal walls are masonry and therefore deemed to provide a suitable acoustic
Noise levels are acceptable?	B	The building was occupied and noise levels was at a satsfactory level.
Persistent odours are absent?	B	Predominately odourless, though smells were evident in random areas.
Design		
Colour is creatively and therapeutically used for definition and variety?	C	Colour scheme is dated, busy and unattractive. Some areas may not
Landscaping is attractive?	B	Predominately grassed areas, and has gravel around external seating areas, there are limited pot plants and flowers etc.
Planting is optimised for all seasons?	B	Plants not flowering due to time of year
Natural daylight is used to optimum effect?	C	Natural daylight is evident in corridors, restricted natural lighting in social areas and bedrooms
Appropriate finishes are used for floors, ceilings and walls?	C	Some finishes apear to not provide suitable LRV values between elements and decorations can be busy and dated.
Furniture co-ordinates well with overall design?	B	Furniture choice is appears domestic in appearance
Art and craft work is integrated into overall design?	C	No evidence onsite
Interior is reassuring and non-clinical where appropriate	B	Communal areas and bedrooms don't apear clinical.
Where possible, patients and staff have pleasing views from both inside and outside of the building?	C	Limited views available from external seating areas, more use of external

OVERALL RANKING	**C**

Fire Health and Safety

Fire, Health & Safety and Equality Act 2010					
1. FIRE			*FIRE Ranking*	*B*	
Fire Risk Assessment	*Date:*	*16/12/2014*	*Comment:*	*On site FRA is now 4 years old, consider having an updated survey*	
Item	*Rating*	*Estimated Backlog Cost (£)*	*Comment*		
COMPARTMENTATION	A	£0	The inspection was not an intrusive survey, however no major issues were noted.		
FIRE DOORS	A	£0	Fire doors are evident at various locations throughout the site e.g. resident bed-rooms and plant-rooms. The doors all had automatic hold-open devices, however during the time of survey electricians were onsite and therefore it was not possible to ascertain if they work. The circulation doors have been retrospectively installed and were generally in a good condition, fire doors to bedrooms and other areas appeared to be original and although functional were aged and generally in a fair condition.		
ALARM / DETECTION SYSTEMS	C	£17,500	The fire alarm system needs updating to BS5839 level P1 - L1 + M, this shall include flashing beacons throughout for persons with hearing impairments and all necessary interfaces with door hold open devices, gas valves, etc.		
TEXTILES AND FURNITURE	A	£0	Generally acceptable but all wallpaper should be considered of removal as it is flammable and can cause fire spread.		
STORAGE FLAMMABLE SUBSTANCES	A	£0	All COSHH materials stored in a locked cupboard with keypad entry		
COMPLIANCE WITH FIRECODE (Survey in place)	C	£10,000	A previous Fire Risk Assessment dated 16/12/2014 is on site. A signage survey is required as fire exit routes are not obvious from all areas of the building.		
2. HEALTH & SAFETY			*HEALTH & SAFETY Ranking*	*B*	
Health and Safety Risk Assessment	*Date:*	*19th September 2018*	*Comment:*		
Item	*Rating*	*Estimated Backlog Cost (£)*	*Comment*		
ELECTRICAL SERVICES; SUPPLY AND DISTRIBUTION (PAT and Fixed wire)	C	£0	PAT test certificate out of date		
ASBESTOS	A	£0	Asbestos survey onsite dated 23/07/2013		
CONTROL OF LEGIONELLA	A	£0	Control of legionella related information available onsite dated 20/11/2017		
HEALTH AND SAFETY AT WORK ETC ACT 1974 (Lighting/ Falls/ Ladders / Safety Glazing/ Gas/ Ventilation/ Lifts) (HIGH LEVEL SURVEY)	B	£0	Internal glass not tested/identifed as safety glazing.		
FOOD HYGIENE (Certificate)	C	£0	Logged on the computer no certificate visible during survey.		
COSHH REGS (Information / storage)	A	£0	All COSHH materials stored in a locked cupboard with keypad entry		
PRESSURISED SYSTEMS (Written scheme in place + monitored)	NA	£0	N/A		
M+O OF EQUIPMENT IN CONFINED SPACES (Access/ Ventilation/ Signage)	NA	£0	N/A		
SURFACE TEMPERATURE OF HEAT EMITTING DEVICES (Exposed pipework in reach (Boxing/ Guards)	C	£25,000	Consideration should be given to replacing the existing radiators with new LST radiators and thermostatic mixing valves to ensure that the heating system can operate correctly and be controllable.		
3. EQUALITY ACT 2010			*DDA Ranking*	*B*	
Access Audit	*Date:*	*19th September 2018*	*Comment:*		
	Rating	*Estimated Backlog Cost (£)*	*Comment*		
Car Park	A	£0	1nr accessible spaces in the car park, remaining car park spaces unmarked.		
Main Entrance	B	£3,500	The main entrance double doorset is not powered, has access control and slightly raised threshold, which combined with the double doorsets may pose awkward for ambulance crews.		
External Stairs	A	£0	No external stairs located on site		
Means of Escape	C	£12,500	External means of escape routes are unlit, the ramps have no landing, no handrails, can be steep and potentially slippery when wet.		
Reception Area and Lobbies	A	£0	The reception area had an obvious reception counter, was clean and clear.		
Corridors and Circulation Areas	B	£0	The corridors are not currently 1800mm, which is the recommended width for two wheelchairs to pass each other.		
Internal Doors	A	£0	Internal doors are generally an adequate width for wheelchair access.		
	Cost Total (B)	68,500			

Rating	
A	Building complies with all relevant standards and guidance; equal to a new building
B	Action will be required within the current period to comply with relevant guidance and statutory requirements
C	Known contravention of one or more standards - which falls short of "B"
D	Dangerously below "B", e.g.: " that have been subject to adverse external inspections
E	Supplementary to "C" or "D", indicating that nothing but a total rebuild or relocation will suffice (too impractical or expensive to remedy)

SUMMARY - FIRE, HEALTH & SAFETY AND EQUALITY ACT 2010 (Costs below are taken from the Condition Data)

	Total	A	B	C	D	E
Fire	0.0	0.00	0.00	27,500.00	0.00	0.00
Health and Safety	0.0	0.00	0.00	25,000.00	0.00	0.00
DDA	0.0	0.00	3,500.00	12,500.00	0.00	0.00
TOTAL	0.0	0.00	3,500.00	65,000.00	0.00	0.00

OVERALL STATUTORY RANKING	**C**

Energy Survey

Survey Date:	6th November 2018	Organisation/Name	Derbyshire County Council
Property:	Briar Close HOP	Overall Volume:	-
Building:	1	Overall area	Approx 1300m2
Block:	1	Number of floors	2

A	Energy Performance Operational Rating: 0 > 25
B	Energy Performance Operational Rating: 26 > 50
C	Energy Performance Operational Rating: 51 > 75
D	Energy Performance Operational Rating: 76 > 100
E	Energy Performance Operational Rating: 101 > 125
F	Energy Performance Operational Rating: 126 > 150
G	Energy Performance Operational Rating: 150+
X	Supplementary rating added to the Energy Performance Operational Ratings A > G, to indicate a presumed estimate for the buildings DEC ranking i.e. Cx, Dx,
	This tells how efficiently energy has been used in the building. The numbers do not represent actual units of energy consumed; they represent comparative energy efficiency. The higher the Energy Performance Operational Rating, indicates that there is oppitunity to improve the buildings effciency.

Energy usage for this block	Heating - 368 kWh/m2/year Electricity - 85 kWh/m2/year

Ranking for this block	**E (101)**

Energy saving solutions onsite:-

Windows and doors are all double-glazed aluminium or uPVC units
New energy-efficient boilers are evident onsite
Some LEDs are also evident onsite
Futher measures are available in the Mechanical and Electrical survey, avalable within this report.

Appendix B

Building Floor Plan Drawings and Room Data Sheet

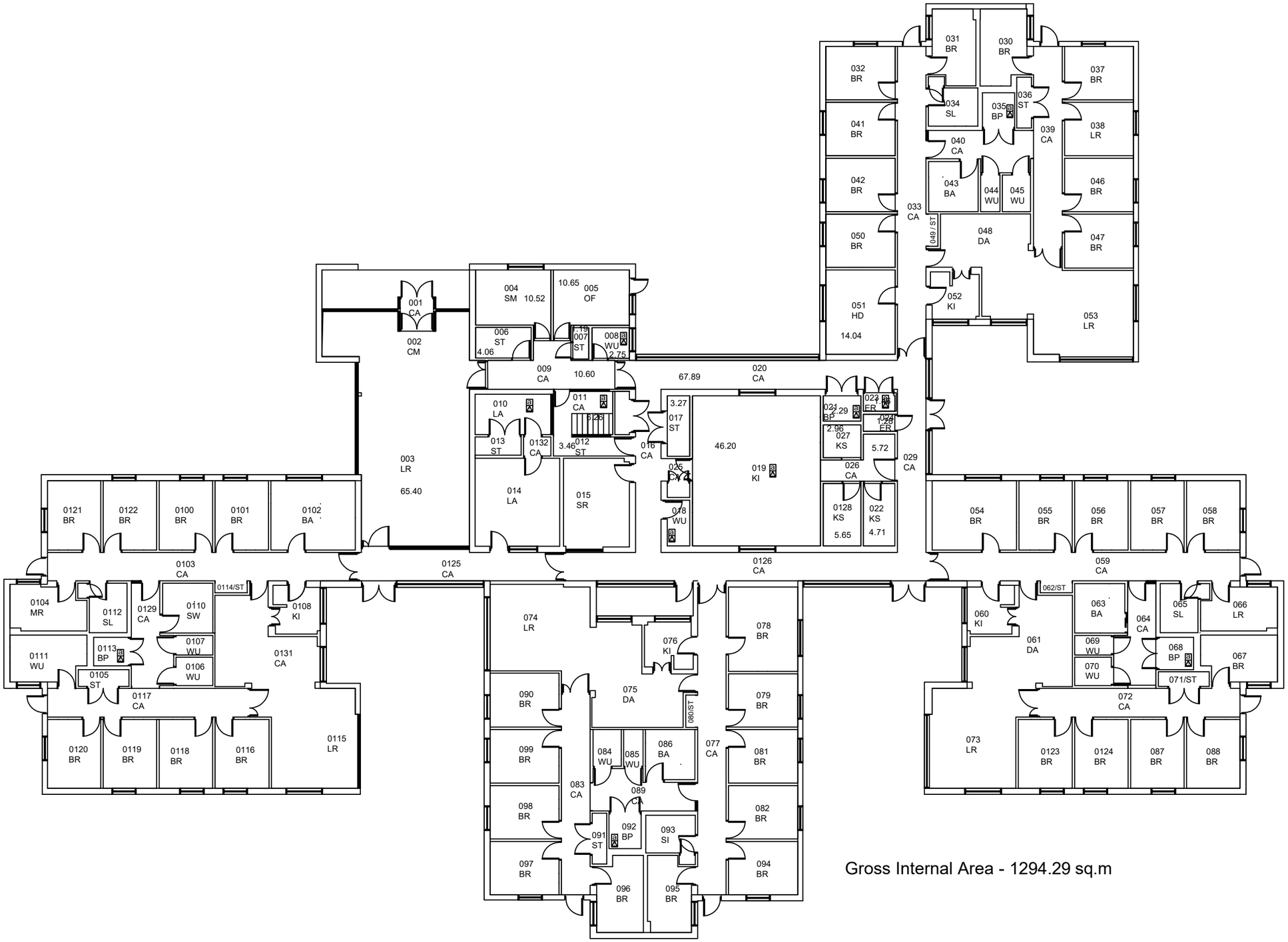

Gross Internal Area - 1294.29 sq.m

Do not scale

Use only written dimensions. All dimensions must be verified prior to the works being put into hand and any discrepancies reported to the originator

LOCATION / KEY PLAN
N.T.S.

General Notes

Rev.	Details of Revision	Date	Initial
A	Asbestos update	Oct 13	LS

Derbyshire County Council
Corporate Resources

Head of Corporate Property
Jeremy Goacher
Chatsworth Hall, Chesterfield Road,
Matlock, Derbyshire DE4 3FW
Tel. (01629) 580000 Fax. (01629) 585114

Project
BRIAR CLOSE
H.O.P

UPRN Number

Drawing Number
1608/01/01-GF/B/D001

Revision

Title
SITE 01
BLOCK 01
GROUND FLOOR

Scale	Drawn	Checked
1:100	F&G	
Original Size	Date	Date
A1	JUN 08	

Status

INVESTOR IN PEOPLE

This map is reproduced from the Ordnance Survey material with the permission of Ordnance Survey on behalf of the controller of Her Majesty's Stationary Office © Crown Copyright. Unauthorised reproduction infringes Crown Copyright and may lead to prosecution or civil proceedings. 100023251 2008

© Derbyshire County Council Copyright: Reproduction in whole or part by any means is prohibited without the prior written permission of the Director of Corporate Resources

© Crown copyright. All rights reserved. 100023251 2008

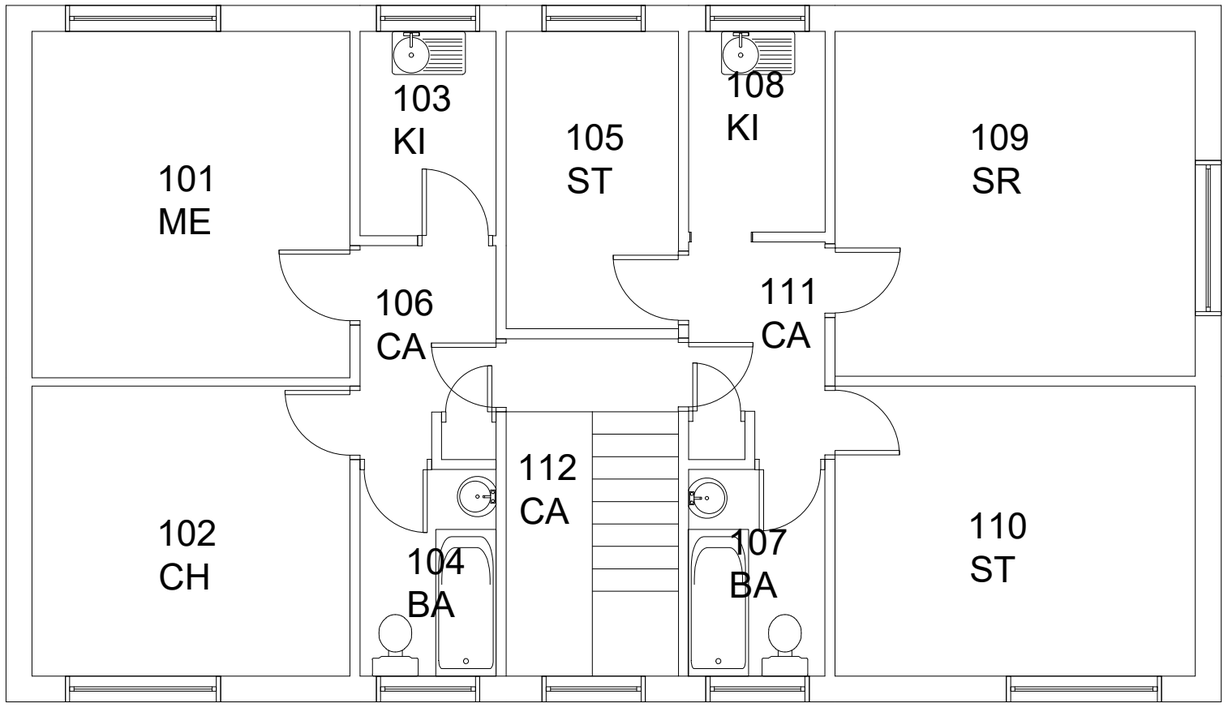

Do not scale

Use only written dimensions. All dimensions must be verified prior to the works being put into hand and any discrepancies reported to the originator

Rev.	Details of Revision	Date	Initial
A	Update Asbestos	Oct 13	LS

Derbyshire County Council
Corporate Resources

Chatsworth Hall, Matlock, DE4 3FW
Tel. (01629) 580000
Fax. (01629) 585114

Project
BRIAR CLOSE
H.O.P

UPRN Number

Drawing Number
1608/01/01-A/B/D001

Revision

Title
SITE 01
BLOCK 01
FIRST FLOOR

Scale	Drawn	Checked
1:100	F&G	
Original Size	Date	Date
A4	JUN 08	

Status

© Derbyshire County Council Copyright: Reproduction in whole or part by any means is prohibited without the prior written permission of the Director of Corporate Resources

Appendix C

Building Photographs

Briar Close HOP

Photo Schedule

SNC·LAVALIN

FAITHFUL GOULD

Member of the SNC-Lavalin Group

001

002

SNC·LAVALIN

FAITHFUL GOULD
Member of the SNC-Lavalin Group

003

004

005

007

008

009

010

011

012

013

014

015

016

017

018

019

020

021

022

023

024

025

026

027

028

029

030

031

032

033

034

035

SNC·LAVALIN

FAITHFUL GOULD
Member of the SNC-Lavalin Group

036

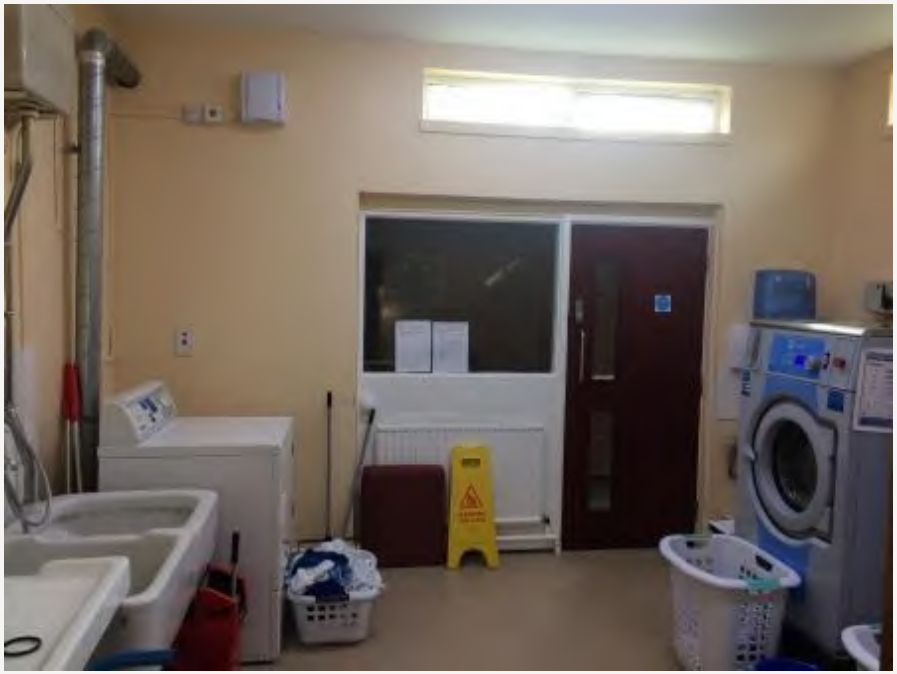

037

038

039

040

041

042

043

044

045

046

047

SNC·LAVALIN

FAITHFUL+GOULD
Member of the SNC-Lavalin Group

048

049

Appendix D

M&E Report

Bringing buildings to life

Briar Close House HOP
Engineering Services Condition Survey

YA3985-ME-CHS-RPT-003

November 2018

JOB

Briar Close House HOP, Briar Close, Borrowash, Derbyshire. DE72 3GB.

JOB NO

YA3985
REPORT
Engineering Services Condition Survey

DOCUMENT NUMBER (if applicable)
YA3985-ME-CHS-RPT-003

STATUS:
For Comment

DATE:
6th November 2018

This report has been authorised by:

……..
Gareth Davies
Associate

This report is confidential and personal to the party for whom it was prepared.

Revision	DCC No.	Comments	Date	Author	Checked
00	-	Information	06/11/2018	KRM	

No liability is accepted for any third-party use of this report.

This report is hereby signed off as the brief by: -

Company	<Enter company>
Name	
Role	
Date	
Signature	
Company	<Enter company>
Name	
Role	
Date	
Signature	
Company	<Enter company>
Name	
Role	
Date	
Signature	

Contents

1.0 Executive Summary **1**

2.0 Introduction **3**

3.0 Summary of Existing Services **4**

4.0 Recommended Replacement Works **43**

5.0 Building Suitability **46**

6.0 Energy Efficiency **49**

Appendix 1 – Excel Spreadsheet Condition Report

Appendix 2 – Care Home Services Check List

1.0 Executive Summary

This report has been commissioned and produced to identify the current condition of the existing mechanical and electrical services within Briar Close House HOP Care Home, Derbyshire.

1.1 Mechanical Services

The mechanical services were in varying states of order/condition, with the Boilers, pumps and some of the pressurisation units having been replaced in the past couple of years and these are in good condition. The existing HWS Calorifiers although older appeared to be in a fairly good condition and operational at the time of the inspection.

The heating system generally comprised of a heating system for each of the 5 No boiler systems in the building which appeared to be from the original installation. The radiators appeared to be the original radiators installed and appeared to be operational the majority of the radiators have been provided with thermostatic valves (although their operation was not checked).

The general controls and heating controls seemed to be very basic although they appeared to incorporate some compensation control. The existing controls appear to consist of a Coster controller and local thermostats.

The boiler houses were still quite hot due as there is only high level vents through the roof penthouses louvres with a mechanical fan installed to pull hot ait from the room. Also the pipework has been partially insulated, but the valves and pumps have exposed pipework. All of the pipework needs to be fully insulated and the valves should be provided with thermal jackets to reduce heat gain in the space.

The discharge from safety valves and general condensate drains appear to differ on each of the plantrooms and are not consistent and generally not to the latest regulations.

Ventilation throughout the building is generally via natural ventilation via openable windows with the kitchen and toilets and other ancillary rooms being provided with local extract systems.

The kitchen has a compliant ventilation system interlinked with the cooking gas supplies. The supply and extract fans are located on the roof just outside the kitchen area, the extract discharges off the roof and smells were noticed in the courtyard behind the kitchen.

1.2 Electrical Services

The incoming utility service head was a 100A Henley service head. The meter is a direct reading meter which then feed a Square D MCCB Panel board.

Generally the remote distribution boards were being replaced with Schneider Acti9 distribution boards, the Laundry distribution board is an old Crabtree distribution board and the 1st floor flats distribution board is an old Dorman Smith consumer unit. It was noted that the new distribution boards have been completely provided with RCBO's including the lighting circuits.

All lighting was operating but generally this was operating with fluorescent lamps in the bedrooms, general corridor fluorescent luminaires and in a couple of rooms LED luminaires had been installed. Consideration should be given to installing dimmable LED lamps where possible in the bedrooms and the fluorescent luminaires replaced with LED luminaires in the corridors and common areas.

It was not possible to fully identify the condition of the fixed wiring. Whilst the wiring appears to have passed insulation resistance tests on the neutral/earth and live/earth, due to its age, we would recommend that the wiring should be replaced with a new modern wiring system, this would also allow for some of the rooms to be provided with lighting controls to improve energy usage.

2.0 Introduction

Troup Bywaters + Anders were instructed by Faithful & Gould to carry out a condition survey of the mechanical and electrical services at Briar Close House HOP Care Home, Briar Close, Borrowash. Derbyshire. DE72 3GB. The survey took place on 6th November 2018.

The building is generally a single storey building with a 1st floor flat area to the central section of the building which was originally constructed in circa the 1980's. There were no record drawings, or operating and maintenance manuals available however their maintenance record keeping was up to date. Access was available to the majority of the areas; hence, this report is based upon a non-intrusive visual inspection only.

3.0 Summary of Existing Services

3.1 Existing Building Details

The building has been constructed with 4 no self-contained bedroom wings each containing their own boiler plant and hot water generation system located within separate boiler houses. The bedroom wings are connected to a central amenity area which also has been provided with a 5th Boiler house. Each wing area has a resident's lounge area and certain wings have been provided with a smoking room, hairdressing salon, medical room and sluice rooms.

The Central amenity area consists of the main entrance area, general offices main kitchen, dining/common room, laundry, staff room and 2 No first floor flats.

3.2 Existing Incoming Services

Mechanical Services

The incoming gas, has been routed in the driveway between the main building and the garage/bin storage area and into the meter which is located within remote building adjacent to bedrooms 046/047. A second meter (we assume to monitor the kitchen gas usage) is located in a green GRP enclosure adjacent to bedroom 054.

The gas pipework is distributed over the roof to each of the boiler houses and the main kitchen. The pipework appears to have been wrapped in a protective grey tape, so the final condition of the pipework is not clear and the pipe needs to be provided with gas identification labels.

The gas distribution system within the building is a manual system and appears not to be linked to the fire alarm system to shut off the gas under fire conditions. An automatic shut off system should be considered to shut the gas system off under fire conditions.

Within the kitchen, the gas system is linked to the kitchen ventilation system and has a gas proving /interlock system installed.

The MCWS appears to enter the building in the amenity boiler house but there is no water meter inside the building. The incoming valve was not labelled/identified, which makes it difficult to fully identify if this is the main incoming valve. This valve needs to be identified and incorporated into the building manual for the means to isolate the whole building if a leak is detected.

The distribution pipework is below the slab into this plantroom, and it was not possible to fully identify the main incoming valve and if there is external MCWS pipework feeding each plantroom/wing of the building. This needs to be identified and recorded.

Currently the building does not any sprinklers installed and consideration should be given reviewing the building for the use of sprinklers to assist in the protection of the building, however this would require a review of the incoming water supply and incoming electrical supply to be capable of operating a tanked sprinkler system. The main switchgear will need to be modified to incorporate power supplies as per the sprinkler regulations and BS9999. A suitable location for a tank will also need to be identified.

Photograph No 1 – Incoming Gas meter building.

Photograph No 2 – The Gas meter located in external meter room.

Photograph No 3 – Typical Gas pipework entering the plantrooms is routed through the penthouse ventilation housing and has a manual gas isolation valve in the boiler house.

Photograph No 4 – The Gas meter for the main kitchen, gas enters into the main kitchen via a roof light note there is an isolation valve located at high level.

Electrical Services

The electrical incoming utility supply enters the building in room 023 and terminates into a 100A Henley service head, this room contains the incoming service head and utility meter. The nursing home appears to have a 3 phase 100A supply as the meter is a direct reading meter. The meter tails have not been supported from the meter to the mains trunking and have been left hanging.

Photograph No 5 – The Incoming electrical utility supply is located in room 023.

Photograph No 6 – The incoming utility meter for the care home.

Photograph No 7 – The main earth bar has been replaced but it is not clear if all of the main earth bonds have been installed as the cabling has not been labelled.

Existing Mechanical Services

Low Temperature Hot Water Boilers

The building has been provided with 5 No boiler houses one per bedroom wing and one in the Amenity section of the buiding. Each boiler house generally has a Remeha Quinta-Pro 65s Boiler, these have been installed in the past couple of years, however boiler house 113 has an Ideal Evomax 120 condensing boiler. There is no evidence of any boiler testing having been carried out as there are no test results on the boiler casings or within the available manuals on site.

Each boiler has its own shunt pump, a variable temperature heating pump and a primary HWS pump. These are mainly twinhead pumps for run and standby but in some boiler rooms they are only single pumps with no run and standby facility. In most instances the insulation is generally missing and there are no insulated valve covers currently installed, these need to be installed.

The boiler condensate connections have just been pushed into the top of a plastic pipe and these should be correctly terminated. The condensate is discharged into plastic drainage pipework which connects into the drainage system, it was not possible to fully identify if the pipework has an air/water trap fitted in all instances and this needs to be investigated further. It was also not possible to fully identify which drainage connection this condensate has been connected to, again this should be identified.

All of the pressure relief pipework discharges water onto the floor rather than being taken to a gully. This could lead to 100°C water discharging into the corridor where the elderly residents could be moving around. These pipes should be connected back to a drainage stack to stop flooding of the corridor from occuring.

One of the boilers (Boiler House BP092) within the Blue Block is in fault and calling for a service. It is not clear as to when the boilers were last serviced and it would be a recommendation that all of the boilers and the boiler pipework should be serviced and all test results taped to the boiler casing after inspection as well as being logged in the site log books.

The LTHW heating and domestic HWS systems have been provided with expansion vessels. It is not clear if the domestic HWS vessel has been provided with the correct number of valves and drain off points to allow the vessel to be cleaned correctly. This needs to be reviewed and all HWS and any MCWS pressure vessels provided with the correct valves and drain down facilities.

Photograph No 8 – Typical Boiler within the boiler plantrooms.

Photograph No 9 – Grundfos Boiler shunt pump - Note the pressure relief pipework discharges onto the floor.

Photograph No 10 – Typical Radiator Circulation Pumps.

Photograph No 11 – Typical HWS Primary Circulation Pumps.

Photograph No 12 – Mikrofill EFD heating system pressurisation unit – Note water drain off pipe not correctly connected to any pipework.

Photograph No 13 – Boiler connected to a small low loss header, note no insulation installed to pipework

Photograph No 14 – Typical High level penthouse ventilation housing to each boiler house. There appears to be an extract fan through the penthouse roof.

Photograph No 15 – Typical boiler flue installation through old flue and onto roof.

Photograph No 16 – Boiler in plantroom No 092 has service alarm indicated on the boiler control panel. This boiler needs to be serviced.

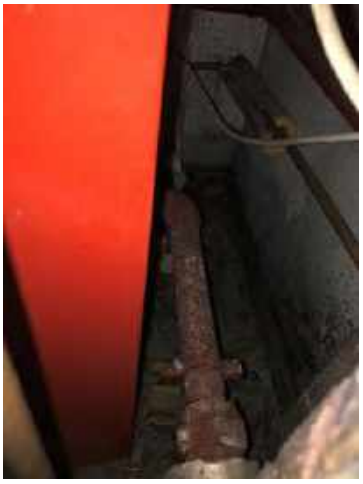

Photograph No 17 – Typical LTHW pipework showing signs of rusting and not insulated in boiler house 092.

Photograph No 18 – Typical LTHW expansion vessels installed within the boiler houses.

Photograph No 19 – Typical domestic hot water expansion vessel installed within the boiler houses.

Photograph No 20 – installed in boiler house BP10 the heating system has been provided with a magnetic filter, all boiler systems should be provided with this type of filter.

Domestic Water Services

Hot water to each area of the building is provided by an LTHW heated Calorifier, these are located within the boiler house in each bedroom block and in an adjacent room to the boiler house within the Amenity block. These units are older than the boilers but are in a fairly good condition and were operational but coming to the end of their life and should be considered to be replaced in 3-4 years. The Calorifier has a diverting valve on the heating system from the boiler to maintain the temperature in the Calorifier.

The Calorifier pressure relief pipework to the cylinder and automatic air vent located are open ended and drain directly onto the floor of the cupboard, this could allow 100°C water spreading under the door into corridor where elderly persons could be walking.

Each of the hot water systems has been provided with a secondary return pump located within the boiler houses.

Pipework is not clearly and correctly labelled, some pipework has not been insulated and the isolation valves have not been labelled and there is no plantroom schematic or valve chart within any of the plantrooms.

There are no cold water storage tanks installed and the cold water outlets generally are all supplied from the mains cold water (MCWS) throughout and there are no issues with the distribution pipework. It is not clear if the domestic MCWS and DHWS service pipework is adequately insulated and labelled correctly above the false ceilings. This needs to be verified so that there is no heat loss or heat gain to these domestic service pipes when running alongside each other and with the LTHW pipes.

Generally the wash hand basins and sinks around the building have been provided with thermostatic mixing valves installed adjacent to the sanitary ware.

All of the water taps/outlets should be checked with regards to pressures, in certain areas when taps were turned on the pressure was far too great resulting in water over the floor. This should be reviewed to either reduce the pressure or install flow restrictors on the outlets.

The Amenity block has been provided with a laundry and each bedroom wing has a central bathroom with motorised bath and a sluice room.

Some of the toilet cisterns are made of an unknown plastic material, these may contain asbestos and will need to be replaced with a modern toilet/cistern, and the new toilets should be designed to provide a minimum flush to provide water conservation.

Photograph No 21 – Typical Beeston HR Calorifier for the domestic HWS generation.

Photograph No 22 – Calorifier pressure relief discharge pipework not fully pipped up and discharging over the edge of the calorifier and directly onto the floor.

Photograph No 23 – LTHW control diverting valve to control the Calorifier temperature. Please note, that the LTHW steel pipework and the domestic HWS copper pipework is not adequately insulated or labelled.

Photograph No 24 – Typical HWS secondary pump installed within the boiler houses, note there is some scale forming by the pipework joints.

Photograph No 25 – Typical bedroom sink with thermostatic mixing valve installed below the sink.

Photograph No 26 – Typical stainless steel sluice in sluice rooms.

Photograph No 27 – Typical motorised baths in bedroom block central bathrooms.

Photograph No 28 – Some of the Toilets have plastic cisterns which may contain asbestos and will need to be replaced.

Heating Controls System

The boilers are generally controlled by a Coster Control Panel and by manually switching between pumps, there appears to be no heat metering or monitoring of the systems and the only control is a space sensor located outside of the boiler house. This system appears to be a slightly larger domestic control system.

Consideration should be given to replacing the controls with an efficient controls system that incorporates optimisation software, a new variable temperature heating system, pump switching for equal loads and operation. It may also be worth investigating if the provision of EC variable speed pumps would benefit the EPC certificate for the building.

There were no controls schematics fitted within the plantrooms indicating how the controls operate and where the control devices are located.

Photograph No 29 – Typical boiler and HWS plant control system.

Photograph No 30 – Typical Coster RTE 955 Plant Controller.

Photograph No 31 – Plant wiring installed in plastic trunking, Note the trunking lid and end cap are missing in boiler plantroom 092Internal Heating

The heating within the building is generally LST radiators installed on a single pipe heating system,. Due to the age of this system it would be beneficial to replace the heating pipework with a new 2 pipe flow and return system. The heating system should be configured as a variable temperature system and linked to a new compensated heating control system.

All of the radiators appear to be from the original install and in a reasonable condition and consideration should be given to replacing these with new LST radiators wand new thermostatic valves sized for the rooms. A flow bypass system installed so that when all of the thermostatic valves shut down, water can still flow through the system.

A magnetic filter should be fitted to the heating return pipework on all boiler installations to assist in the removal of any metal filings within the system. It would also be recommended that the heating systems should be provided with a chemical dosing pot to allow the systems to be dosed.

Photograph No 32 – Typical bedroom wall mounted LST radiators.

Photograph No 33 – Typical Floor mounted corridor LST radiator.

Photograph No 34 – The kitchen has a LTHW wall mounted fan convector in the office area of the kitchen.

Ventilation

The toilets have all been provided with either wall mounted or ceiling mounted extract fans located within the roof lights, some of the fans appeared not to be operational and they need to be checked for operation.

The Staff toilet room number 018 does not have any ventilation fitted and a roof mounted extract fan should be installed.

The kitchen ventilation currently operates via 2 No. fans installed on the roof and routed via the old windows for the high level section of the kitchen. These fans draw make-up air through a grille installed from the amenity corridor into the kitchen. This grille appears not to have any fire dampers fitted into the corridor walls.

The kitchen ventilation complies with the current regulations for a modern kitchen and is interlocked with the kitchen gas system.

The sluice rooms have only been provided with an openable roof light which is not a good solution during the winter months when the roof light would need to be left closed. The sluice room needs to be provided with a trickle ventilation system continuously operating with a PIR to ramp up the fan to full power when a person enters the room.

Photograph No 35 – The main kitchen hood is a supply and extract hood.

Photograph No 36 – Kitchen gas/ventilation interface control panel.

Photograph No 37 – There is a grille from the corridor into the kitchen to draw additional air into the kitchen, it is not clear if this has been provided with a fire damper where it passes through the wall.

Photograph No 38 – Typical ventilation extract fan currently installed in the kitchen stores ceiling void/roof light.

Photograph No 39 – Kitchen extract fan on the roof, this was causing cooking smells to be smelt in this courtyard which has doors into the building.

Photograph No 40 – Typical toilet extract fan arrangement.

Photograph No 41 – Typical assisted bathroom extract fan arrangement.

Photograph No 42 – The sluice rooms are typically ventilated by an openable roof light, in this instance vegetation was entering the room. The rooms would benefit from an extract fan operating on a trickle vent system with PIR controlled boost function.

Laundry

The building has a laundry currently installed for washing the resident's cloths. The laundry consists of 2 No industrial washing machines, these are an Electrolux W5105S and a W475H and 2 No electric dryers manufactured by Huebush. The dryers have been ducted to atmosphere by the use of metal circular ductwork. The ductwork discharges externally directly onto the roof. There is a high level air make up grille is fitted above the dryers and adjacent to the exhaust ducts.

It is not clear if the circular ducts have been cleaned to ensure that there is no build-up of lint within the ducts restricting the discharge of air from the dryer. The ducts should be provided with access panels to make cleaning easier.

Photograph No 43 – Laundry washing machines + 1 No electric dryer.

Photograph No 44 – Second laundry electric dryer

Photograph No 45 – Washing machine connections behind the units, note the lack of access to the drainage U-bends and lack of rodding points.

Photograph No 46 – Laundry Dryer extract air duct and make-up air grille. Note dryer ducts extract onto the roof. Not sure if there is an issue with discharge or if the ductwork requires cleaning.

Existing Electrical Services

Electrical Distribution

Located within the electrical cupboard (room 023) is the main electrical distribution board, this is an new Square D panel board, this distribution board feeds a series of distribution boards located throughout the building. Generally the distribution boards have been manufactured by Schneider, but there is a Crabtree distribution board and an old Dorman Smith consumer. The last two distribution boards should be replaced with new Schneider boards.

The new Schneider Acti9 distribution boards have been fully populated with RCBO's throughout the boards that have been replaced, this includes all of the lighting circuits, this is a Council requirement and this is a requirement from the current edition of the BS7671.

There is evidence that different wiring methods have been used in various areas of the building where circuits have been extended/modified over the years. In the boiler house the wiring has been either left hanging or has been supported by use of metal cable loops and is untidy.

It is not clear what the age of the existing wiring is and its overall condition. However due to its age being up to 30 years old, consideration should be given to rewiring the building completely. Although this would mean that sections of the building would need to shut down to allow the building to be refurbished. The works could be split down into the bedroom wings followed by the central amenity area and the flats.

Photograph No 47 – Main MEM distribution board located within the boiler house showing MCB sizes.

Photograph No 48 – Typical bedroom wing distribution board.

Photograph No 49 – Existing 1st floor flats consumer unit – this is an old Dorman Smith consumer unit which is obsolete.

Photograph No 50 – Laundry Crabtree distribution board installed at high level in cupboard 013. Note there is no emergency luminaire or smoke detector in the cupboard.

Internal Lighting

Generally within the bedrooms the lighting consists of a central pendent lamp holder with a GLS lamp and shade fitted which is controlled by a dimmer switch. Over the sink there is a fluorescent mirror/shaver light and over the bed head is a fluorescent wall light. Over the bed there is a pull cord switch which was for switching off the central light.

Throughout the amenity areas and corridors the lighting is provided by means of fluorescent luminaires employing various lamp types and sizes. The lighting was operational and working but only manually switched.

The lighting has been provided with a variety of luminaires, generally the building has a verity of GLS and fluorescent lamps in various types of luminaires, the majority of the luminaires are GLS pendant fittings in the bedrooms. There are also some surface fixed Cat 2 luminaires, Design Plan vandal resistant and surface fixed bulk head luminaires.

Photograph No 51 – Typical bedroom central pendant luminaire.

Photograph No 52 – Typical bedroom with luminaire above the bedhead.

Photograph No 53 – Corridor by front offices with notice board spotlight.

Photograph No 54 – Typical bedroom mirror luminaire.

Photograph No 55 – Amenity area corridor lighting

Photograph No 56 – Typical Bedroom Corridor lighting.

Photograph No 57 – Main Kitchen Lighting

Photograph No 58 – Common room lighting.

Photograph No 59 – Common room lighting.

Photograph No 60 – Common room lighting.

Photograph No 61 – Typical sluice room lighting.

Photograph No 62 – Some of the bathrooms have old or defective luminaires, not this appears to be an old SL18 compact fluorescent lamp that has been fitted to a glass bowl luminaire and the bowl has not been installed, these luminaires are only rated at IP20 and are not suitable for a bathroom.

Photograph No 63 – One of the toilet pendent luminaires is not correctly secured to the soffit and it appears that the greg rose is broken.

The lighting in the building should be reviewed to ascertain the best options for providing energy efficient luminaires and lighting controls. As the building is provided with primarily circulation spaces and bedrooms the use the colour temperature of the lamps should be considered as a warmer light would be more beneficial for the residents. The corridors could be provided with photocell control to make the best use of natural light during the day with artificial lighting being used once the light levels drop to a particular level and would be on during the night. It may also be beneficial to have a series of night lights on manual switches to reduce the corridor lighting to a minimal access level during the night.

The bedrooms should be reviewed and where possible refurbished with a central pendent luminaire and two LED recessed down lighters. This should be considered for all bedrooms to allow two different illumination levels for the residents. The lighting should be controlled by switches at the entrance door and by each bed, thus allowing the resident to be able to switch off the lighting whilst being in bed. All switches should be provided with a colour contract face plate and large easy use switches.

Where possible bathrooms, storage areas, staff rooms and the laundry, these rooms should be provided with LED luminaires and controlled by either presence or absence detection to control the lighting in the rooms.

Photograph No 64 – Typical lighting currently installed in the 1st floor flat areas.

Emergency Lighting

Emergency lighting within common area is generally provided by means of separate self-contained emergency luminaires operating for a period of 3 hours duration during mains failure of the normal lighting.

None of the bedrooms currently contain emergency luminaires, and it would be beneficial to install emergency luminaires in each room.

Not all of the rooms has been provided with emergency lights, these include the bedrooms, electrical intake room, and boiler houses. The building needs to be further reviewed to ensure that all area are provided with suitable means of escape lighting.

The building is lacking the correct number of illuminated exit signs to ensure that the escape routes are clearly identified. It is not clear if this building should be classified as a public building as visitors for the residents may be within the building and need directing to an emergency exit, again this should be reviewed with the Fire Officer to ensure the correct illuminated signage is installed.

Photograph No 65 – Typical corridor with curtains over the emergency exit doors. Note the sign on the door has a non-maintained emergency luminaire in front of the sign. It will not be possible to see the sign at night with the curtains closed.

Photograph No 66 – This sign is located on a door, there is an emergency luminaire but the sign is not visible from the corridor which is at 90º to the door.

Photograph No 67 – This door is the nearest door from the common rooms to a fire escape and there is no Exit sign above the door, with the door closed the exit sign cannot be seen.

External Lighting

Externally there are a number of wall mounted area floodlights to illuminate the delivery driveway and delivery route into the building. Generally around the building there are a number of emergency luminaires located over the escape doors but there are no general luminaires to allow a person to move around the building after dark. Not all of the escape doors have been provided with emergency luminaires. The external lighting should be reviewed with the Fire Officer to ensure the correct lighting is installed.

It would be beneficial to install general external lighting (complete with emergency battery back-up) to allow the residents to escape or to be evacuated from the exits behind the building to the front of the building and the muster point.

Photograph No 68 – Building mounted external luminaires to illuminate the delivery area.

Photograph No 69 – Wall mounted area luminaire for delivery entrance area. Note there is no emergency luminaire over the delivery door.

Photograph No 70 – Not all of the escape doors have external emergency luminaires.

The perimeter walkways around the side of the building should be provided with lighting to allow the staff and residents to escape to a safe area during the hours of darkness, there are a number of turns to get past the building and out onto the street, however the lighting should not cause issues to the adjacent houses by increasing the lighting during the night.

Small Power

The small power is generally either twin switched socket outlets installed on the walls. Additional small power outlets have been installed for the extract fans, power supplies for kitchen equipment, laundry equipment and some office equipment.

Photograph No 71 – Typical bedroom with sockets increased in height off the floor but are not fully colour contrasted with the wall finish.

Photograph No 72 – Twin bedded bedroom with a twin socket between beds. This room had a single occupant with a hospital bed. Note there is a light over the bed head.

The general condition of the accessories is acceptable and has passed the recent electrical inspection. Generally the accessories have been installed at a suitable height but could be increased in height off the floors in the bedrooms.

Photograph No 73 – Typical toilet extract fan power supply and controls.

Photograph No 74 – accessory plate removed and cable ends tapped up in plantroom 092.

Data

The building is provided with data points from a data rack in the office room No 005 and consists of cable installed in a similar way to the small power outlets.

Photograph No 75 – Data rack installed in room No 005.

Photograph No 76 – Public pay phone in main entrance area.

Fire Alarm

The building is provided with a conventional zonal fire alarm system which is obsolete, with the system being split into 5 zones. The panel is located in the main entrance and is visible from outside with the blinds open. There are no faults indicated on the panel and appears to be operating correctly.

Under the British Standards the building appears to have been designed to a standard of L2 + M, but not all areas have been provided with smoke detection, manual call points and electronic sounders. As this is a building with persons living in, the building should be provided with a P1 - L1 + M system with all the necessary visual alarm devices (VAD's) and audibility levels of 75 dbA at the bedhead of each bedroom.

From our visual inspection not all of the areas have been provided with automatic detection, generally all of the bedrooms have been provided with automatic detectors, but it is not clear if these are fully operational and working, due to their age and condition. It was noted that some of the detectors have been replaced with newer detectors and it was noted that a corridor outside the boiler house

(room 035) did not have any automatic detection installed. It was not clear if the kitchen, the boiler houses and some of the toilets had been provided with automatic detection.

It is of concern that the main kitchen did not appear to have an automatic detection installed and that there was no gas shut off system within the kitchen or at the main incoming gas meter. A gas shut off system should be installed especially as the gas pipework is routed across the roof of the building.

We were also concerned that the audibility levels are not in line with BS5839 for sleeping accommodation. The Concern also is that during the night it is not clear if there are sufficient staff available to assist in the removal of the residents who need to be taken out on wheel chairs, it is assumed that this is managed by the staff and that only certain areas are evacuated as a management process for the wing in a fire condition.

There appears not to be any VAD's currently for persons who are hard of hearing, Consideration should be given to installing visual indicators to all areas of the building.

The fire alarm control panel does not comply with EN54 for the control panel and it is not clear how long the battery autonomy is rated at. This panel has reported issues which cannot be resolved as the panel is obsolete and should be replaced with a new addressable system.

The fire alarm wiring is some instances has been extended utilising MICC cable with an orange sheath. It is not clear if the wiring is up to current standards and to ensure that the fire loops are correctly installed the fire alarm system should be rewired utilising modern enhanced fire performance cabling, this will allow any spur connections to be removed from the system and a formal loop formed for each loop to be installed.

The fire alarm system appears to control bedroom doors which have electric door closers fitted to ensure that all bedroom doors are closed under fire conditions. There is a local test/operating switch installed outside each bedroom. It was not possible to establish if the system is fully operational as the fire alarm system was not operated to test and there is very little information as to how this works. Testing of the fire alarm is regularly carried out, and records exist showing the system is tested on a regular basis in accordance with BS5839.

Photograph No 77 – Conventional fire alarm panel located in the main entrance.

Photograph No 78 – heat detector hanging unsupported in boiler house 092.

Photograph No 79 – In the boiler houses there is what appears to be some form of fire alarm detection equipment fed by MICC cable with orange sheath. It is not clear if this is fully operational and working.

Photograph No 80 – Typical bedroom wing dining area with no smoke detector installed.

Security

It appears that an intruder alarm system has been installed in the building consisting of door contacts and PIR detection to all external doors. There is also a First Q Wander guard system installed on all external doors to monitor if a person opens an external door.

The main entrance lobby door to the reception area restricts access into the main part of the building by an access controlled system, consisting of a key pad in the entrance with a push to exit. It was not clear if a green emergency break glass had been installed on the secure side of the door. Some of the door contacts need to be re-fixed back to the structure.

Photograph No 81 – Main entrance door access system and security key pad control.

Photograph No 82 – Security key pad controller located in corridor 016.

Photograph No 83 – Fire exit door with a First Q Wander Guard Alarm fitted.

Nurse Call System

The building has been provided with a nurse call system to all bedrooms, toilets, bathrooms, common rooms and specific rooms. This system was not tested during our inspection but has been assumed that the system is fully operational and working.

It is understood that the First Q Wander Guard is linked to the nurse call system to form a common monitoring system.

Photograph No 84 – Typical bedroom showing nurse call system.

Photograph No 85 – Master Nurse Call system monitor located by the offices.

Television Aerial Systems

Currently each bedroom has been provided with a television aerial, which we assume is suitable for use with digital television transmission from a central aerial system. Consideration should be given to providing residents with Sky, Virgin, Netflix etc. systems as again these may be requested by residents. Some of these services may require Wi-Fi access to achieve connection to the internet.

It may be necessary to provide smart TV's for residents who utilise the internet.

Photograph No 86 – There is an aerial system installed in an adaptable box in the electrical switchroom 023.

4.0 Recommended Replacement Works

The following works have been identified as possible replacement works to be carried out over a number of years. These are as follows:-

Year One Works

Electrical Services

- Replace the fire alarm system to bring the system up to the current standards of BS5839.
- Replacement of the Laundry and 1st floor flat distribution boards with new Schneider Acti9 boards.
- Install dimmable LED lamps to the central pendent luminaires and where necessary replace the dimmer switch with a suitable dimmer switch for the LED Lamps.
- Upgrade the corridor escape signage for maintained illuminated signs at all fire exits and changes in direction.
- Ensure that all of the bedroom fire door closers are operating correctly and linked to the fire alarm system.
- Install additional emergency lighting to external escape routes where the escape route is tight to the side of the building with no street lights to illuminate the route. Consideration to be given to adjacent residents
- Start to rewire the bedroom blocks and install new LED lighting and emergency lighting to all bedrooms on a block by block basis which will allow the building to operate by shutting down a bedroom block whilst leaving the remaining bedroom blocks operational.
- Replace the bedroom corridor, toilet and bathroom lighting with new LED luminaires together with automatic lighting controls to the various areas on a block by block basis.
- Tidy up the controls wiring in the blue wing boiler house and replace trunking lids.
- Re-fix the fire alarm detector to the soffit in the blue wing boiler house.

Mechanical Services

- Service all of the boilers to ensure that they are operating correctly. All boilers to have test results tapped to the boiler casing.

- Insulate and label the pipework within all of the boiler plantrooms and install insulation covers to the valves.
- Install valve schedule and label all valves in all plantrooms.
- Replace all valves/joints that are showing signs of leaks.
- Install a dosing pot onto the system and chemically dose the heating systems.
- Install magnetic filters on each heating system prior to the boilers.
- Install the boiler and HWS Calorifier pressure relief pipework into the condensate drain rather than discharging onto the floor.
- Review and install correct valves and drain points for the expansion vessels.
- Check all pressures from water outlets and taps and reduce if necessary.
- Install a new kitchen ventilation cooking hood and associated ventilation plant.
- Install a new gas solenoid valve to the main incoming gas pipe and interlink the valve to the fire alarm system.
- Install access panels to laundry dryers exhaust ductwork and ensure that the ducts are clear of any lint build-up.

Year Two Works

Electrical Services

- Replacement of the Laundry and 1st floor flat distribution boards with new Schneider Acti9 boards.
- Rewire the 1st floor flats basis to bring the electrical system in line with the latest version of BS7671.
- Install external lighting (Inc. Emergency luminaires) around the perimeter of the building.
- Replace the electrical accessories to ensure that there is a contrast colour plate and large switches are available.

Mechanical Services

- Replace the black plastic toilet cisterns and toilets with new close coupled toilets with built in overflows in lieu of the cisterns with the overflow pipework discharging onto the floor.
- Install extract fans to sluice rooms.
- Replace the fan convector in the main reception area.

- Modify the kitchen roof ductwork to reduce the smells around the building.

Year Three Works

Electrical Services

- Install IT/Data outlets for the installation of Wi-Fi units to all bedroom wings.

Mechanical Services

- Start to replace the heating distribution pipework and radiators on a bedroom block by block basis which will allow the building to operate by shutting down a bedroom block whilst leaving the remaining bedroom blocks operational.
- Install a two pipe heating system and new LST radiators to the bedroom blocks on a block by block basis.
- Replace aging calorifiers in each boiler house.
- Replace the boiler controls and control valves on a bedroom block by block basis to provide an optimised control system and possibly variable speed pumps.
- Replace the domestic hot and cold water services within the bedroom blocks on a block by block basis.
- Install insulation and pipework labelling to all new domestic services and heating pipework.

5.0 Building Suitability

As part of this report the building is to be reviewed against the following standards to review if there are any further upgrades would be required to bring the building up to modern standards.

Due to the age of the building the recommendations for care homes has updated and the following should be considered for this building.

The building has been reviewed against Department of Health - Care Homes for Older People – national Minimum Standards – Care Homes Regulations – Edition 3

The following M&E Services have been identified for the basic standards for a care home, these are as follows:-

Standard 10

10.2 - Service users have easy access to a telephone for use in private and receive their mail unopened.

Standard 19

19.5 – The building complies with the requirements of the local fire service and environmental health department.

19.6 – The use of CCTV cameras is restricted to entrance areas for security purposes only and does not intrude on the daily life of the service users.

Standard 20

20.6 – Lighting in communal rooms is domestic in character, sufficiently bright and positioned to facilitate reading and other activities.

Standard 21

21.2 – There are accessible toilets for service users. Clearly marked and close to lounge and dining areas.

21.3 – In all newly-built homes, new extension to homes and first time registrations a ratio of 1 assisted bath (or assisted shower provided this meets resident's needs) to 8 service users. Where suitably adapted en-suite bathing/shower facilities are provided in services users rooms, these rooms can be excluded from this calculation.

21.4 – Pre-existing care homes, which provided at least 1 assisted bath (or showers provided this meets resident's needs) to 8 service users as at 16th August 2002 continue to do so. Where they do not provide that ratio of baths as at that date, they provide at least the same number of assisted baths as they provided as at 31st March 2002.

21.5 – Each service user has a toilet within close proximity of his/her private accommodation.

21.6 – En-suite facilities (at minimum a toilet and hand basin) are provide to all service users in all new build, extension and all first time registrations from April 2002.

21.7 – The installation of gen-suite facilities should be in addition to the minimum usable floor space standards in any service user's room.

21.8 – En-suite facilities in rooms accommodating users using wheelchairs or other aids, are accessible to them.

21.9 – Any sluices provided are local separated from service users WC and bathing facilities.

Standard 22

22.4 – Aids, hoists and assisted toilets and baths are installed which are capable of meeting the assessed needs of service users.

22.6 – Facilities, including communication aids (e.g. hearing loops), and signs are provided to assist the needs of all service users, taking account of the needs, for example, of those with hearing impairment, visual impairment, dual sensory impairment, learning disabilities or dementia or other cognitive impairment, where necessary.

22.8 – Call system with an accessible alarm facility are provided in every room.

Standard 25

25.2 – Rooms are individually and naturally ventilated with windows conforming to recognised standards

25.4 – Rooms are centrally heated and heating may be controlled in the services users own room.

25.5 – Pipework and radiators are guarded or have guaranteed low temperature surfaces.

25.6 – Lighting in service users accommodation meet recognised standards (150lux), is domestic in character, and includes a table-level lamp lighting.

25.7 – Emergency lighting is provided throughout the home.

25.8 – Water is stored at a temperature of at least 60°C and distributed at 50°C minimum, to prevent risks from Legionella. To prevent risks from scalding, pre-set valves of a type unaffected by changes in water pressure and which have fail safe devices are fitted locally to provide water close to 43°C.

Standard 26

26.3 – Hand washing facilities are prominently sited where infected material and/or clinical waste are being handled.

26.9 – Services and facilities comply with the water supply (water Fittings) regulations 1999.

The items listed above highlight the basic standards for a care home, these requirements will also be enhanced by the following systems.

Fire alarm system to BS5839 level P1 - L1 + M. this shall include flashing beacons throughout for persons with hearing impairments and all necessary interfaces with door hold open devices, gas valves, etc.

Nurse call systems to all bedrooms toilets, bathrooms, shower rooms, medical rooms, lounges, and communal areas with a central and local systems of being able to identify which room the alarm has been activated

Hearing loops to be provided to specific areas around the building such as lounges, office areas dining areas and communal areas.

Emergency lighting to all rooms including bedrooms

Illuminated exit signage throughout the building to ensure that all persons can clearly identify the escape routes.

Door guard/security system to alert staff should an external door is opened, this alerts the staff that a person has left the building other than via the main entrance door.

Kitchen ventilation systems linked to a gas proving system and a gas solenoid system.

6.0 Energy Efficiency

Currently the building has an energy certificate (EPC certificate) with a Rating of E (101 -125) 108. This certificate is dated 15th October 2018, it is not clear if this certificate includes the new boilers currently installed.

One area where it may be possible to further improve the energy efficiency would be to have a look at replacing the existing Calorifiers with new Calorifiers which are capable of accepting solar heating to reduce the cost of the domestic hot water.

All of the heating and domestic service pipework should be fully insulated to reduce heat loss and gain from the adjacent pipework, this will also have a result in reducing heating losses and assist in maintaining the overall system temperatures.

Photograph No 87 – Current EPC Certificate with a rating of D - 100

Another major consideration for energy saving would be for the installation of dimmable LED lamps to all bedroom central luminaires, as this is a case of just replacing lamps providing the dimmable LED lamps can be controlled by a standard dimmer switch.

Within the larger rooms the existing fluorescent luminaires should be replaced with LED luminaires.

All store rooms, toilets and the staircase should be provided with PIR sensors to ensure that the luminaires are switched off after a short period of time.

Consideration should be given to replacing the existing boiler and Calorifier plant with new controls utilising an optimiser and installing a variable temperature heating system.

A final consideration should be given to improving the overall thermal efficiency of the building structure by improving the insulation values of the windows, walls and roofs, this will assist in reducing the heat loss from the building and therefore reducing the heating usage for the building. This should be reviewed when any roof replacements, refurbishments of the rooms or replacement of any windows and doors are carried out.

Appendix 1

Condition Report Spreadsheet

Condition Ranking	
A	A = Good - Performing as intended and operating efficiently
B	B = Satisfactory - performing as intended, exhibiting minor deterioration.
C	C = Poor - exhibiting major defects and/or not operating as intended.
D	D = Failed - life expired and/or serious risk imminent failure

Priority	
1	Urgent
2	within 2 years
3	3 to 5 years
4	5 to 10 years
5	10 to 15 years
6	15 to 25 years

Type	
E	Environmental
F	Fire Precaution
G	Consequential risk
H	Health and Safety
I	Further Investigation
L	Loss of Service
Q	Energy
R	Recommendation
S	Security

ROOM DESCRIPTION				ROOM FABRIC			CONDITION SURVEY																PREDICTED REPLACEMENT (£1s)							
Internal / External	Building	Room No. / Name	Floor	Element	Element group	Sub element group	Unit rate	Item quantity	Standard Rate	CONDITION RANK			Typical Life from new (YEARS)	Estimated Remaining Useful Design Life (YEARS)	Cost	Disrepair Narrative / General Comments	Remedial Works	Photo ref. (Applied to "C" or "D" ratings i.e. Cx or Dx)	Current & Impending Backlog Risk Assessment		SCORE RANGE 1 - 5 6 - 10	RISK RANKING Low Moderate	1 - 2018	2 - 2019	3 - 2021	4 - 2024	5 - 2029	6 - 2039	Total	General Comments
Internal	1	Laundry	G	Electrical Services	Sub-mains switchgear	Distribution Boards	Unit rate	1	£1,000.00	C	2	R	25	within 2 years	£1,000.00	Existing distribution boards to the Laundry to be replaced as panel is obsolete.	Replace the existing distribution boards with modern Schneider Acti9 distribution boards to match the ones already replaced.	N/A						£1,000.00						
Internal	1	Flats	1	Electrical Services	Sub-mains switchgear	Distribution Boards	Unit rate	1	£1,000.00	C	2	R	25	within 2 years	£1,000.00	The flat distribution board is an old Dorman Smith consumer unit which is now obsolete and should be replaced	Replace the board with a new consumer unit.	N/A						£1,000.00						
Internal	1	Amenity Area	G	Electrical Services	Sub-mains switchgear	Sub distribution wiring and containment systems	Unit rate	1	£3,000.00	C	2	R	25	within 2 years	£3,000.00	The existing building wiring was tested in August 2018 and appears to have past these tests, it was not clear from our visual inspection as to the age of the wiring and its overall condition.	As a minimum, repairs of the defects identified by the condition report should be carried out, but consideration should be given to rewiring the building.	N/A						£3,000.00						
Internal	1	1st Floor Flats	G	Electrical Services	Sub-mains switchgear	Sub distribution wiring and containment systems	Unit rate	1	£3,000.00	C	2	R	25	3 to 5 years	£3,000.00	The flat wiring is old and nearing the end of its life.	Rewire the 1st floor flats to the latest version of BS7671.	N/A							£3,000.00					
Internal	1	Bedrooms	G	Electrical Services	Lighting Systems	Emergency lighting (Inc. key switch)	Unit rate	40	£200.00	B	2	R	5	within 2 years	£8,000.00	Bedrooms should be provided with an emergency luminaire	Install a recessed anti-panic emergency luminaire with a new key test switch.	N/A						£8,000.00						
Internal	1	Bedrooms	G	Electrical Services	Lighting Systems	Lighting and luminaires (internal)	Unit rate	40	£40.00	B	2	R	20	within 2 years	£1,600.00	The existing bedroom pendant luminaire should be provided with a dimmable LED lamp and the general lighting supplemented with additional LED recessed down lighters to provide good light levels	Install new LED luminaires to allow for the residents to be able to read and for nursing staff/doctors to be able to carry out medical examinations in the bed rooms.	N/A						£1,600.00						
External	1	Walkways/escape routes	G	Electrical Services	Lighting Systems	Lighting and luminaires (external)	Unit rate	1	£12,500.00	C	2	R	20	within 2 years	£12,500.00	Around the external walkways there are emergency luminaires over the exit doors but there area areas of walkway with no illumination, general and emergency illumination should be installed especially where there is a change in direction or a very narrow walkway.	Install general external luminaires around the building to illuminate the escape routes, luminaires to be controlled by photocells and provided with 3 hour emergency battery back-up.	N/A						£12,500.00						
Internal	1	Bedrooms	G	Electrical Services	Lighting Systems	Lighting and luminaires (internal)	Unit rate	40	£100.00	C	2	R	20	Urgent	£4,000.00	Provision of table lamps in bedrooms	Place a table lamp in each bedroom	N/A					£4,000.00							
Internal	1	Bedrooms	G	Electrical Services	Lighting Systems	Lighting control and management systems	Unit rate	1	£3,000.00	B	2	R	20	3 to 5 years	£3,000.00	Light switches should be replaced with new switches with colour contrast colour plates and new dimmer switches for the pendant luminaire should be installed.	Replace the existing light switches with new switches.	N/A							£3,000.00					
Internal	1	Bedrooms	G	Electrical Services	Protection Systems	Fire Alarm Installations (Inc., call points, sounders and detection)	Unit rate	1	£7,500.00	C	2	R	25	Urgent	£7,500.00	The bedroom smoke detector should be replaced with a new addressable detector with a sounder and a beacon/VAD.	Replace the fire alarm system with a new addressable system.	N/A					£7,500.00							
Internal	1	Corridor	G	Electrical Services	Lighting Systems	Emergency lighting (Inc. key switch)	Unit rate	1	£10,000.00	C	2	R	25	Urgent	£10,000.00	The corridors should be provided with illuminated emergency exit signs and installed at all turns and exits from internal rooms.	A review of the current exit signage should be carried out and where the signs do not comply with BS5266, new signs should be installed.	N/A					£10,000.00							
Internal	1	Corridor	G	Electrical Services	Lighting Systems	Lighting and luminaires (internal)	Unit rate	1	£12,000.00	C	2	R	25	3 to 5 years	£12,000.00	The existing corridor and amenity area luminaires should be replaced with new LED luminaires to improve energy efficiency.	Install new LED luminaires.	N/A							£12,000.00					
Internal	1	Corridor	G	Electrical Services	Lighting Systems	Lighting control and management systems	Unit rate	1	£5,000.00	B	2	R	25	3 to 5 years	£5,000.00	The corridor lighting should be provided with a photocell lighting controls to make use of natural daylight.	All corridor lighting controls should be reviewed and where possible automatic lighting controls should be installed in the corridors.	N/A							£5,000.00					
Internal	1	Corridor	G	Electrical Services	Sub-mains switchgear	Switched socket outlet (SSO)	Unit rate	1	£5,000.00	B	2	R	25	3 to 5 years	£5,000.00	Existing small power outlet plates should be of a contrast colour to the walls.	All corridor small power accessories should be replaced with new accessories with a contrasting colour finish to the wall.	N/A							£5,000.00					
Internal	1	1st Floor Flats	G	Electrical Services	Sub-mains switchgear	Sub distribution wiring and containment systems	Unit rate	2	£4,000.00	B	2	R	25	3 to 5 years	£8,000.00	Flat wiring and accessories are nearing end of their life and need to be replaced	Rewire the two flats including new distribution boards, accessories and lighting.	N/A							£8,000.00					
Internal	1	Corridor	G	Electrical Services	Protection Systems	Fire Alarm Installations (Inc., call points, sounders and detection)	Unit rate	1	£10,000.00	C	2	R	25	Urgent	£10,000.00	The corridor smoke detector should be replaced with a new addressable detector with a sounder and a beacon/VAD.	Replace the fire alarm system with a new addressable system.	N/A					£10,000.00							
Internal	1	Boiler house	G	Mechanical Services	Heating Plant & Auxiliaries	Dosing Pots	Unit rate	5	£200.00	D	1	R	15	Urgent	£1,000.00	No dosing pots installed on heating systems.	Dosing pots to be installed on each heating system	N/A					£1,000.00							
Internal	1	Boiler house	G	Mechanical Services	Heating Plant & Auxiliaries	Magnetic Filters	Unit rate	5	£200.00	D	1	R	10	Urgent	£1,000.00	New boilers have been installed on existing old heating systems. Magnetic filters have been fitted in two of the boiler houses, the remainder should be installed to protect boilers/pumps	Magnetic filters to be installed on each heating system	N/A					£500.00							
Internal	1	Boiler house	G	Mechanical Services	Heating Plant & Auxiliaries	Pressure relief discharges/Tundish	Unit rate	15	£125.00	D	1	H	20	Urgent	£1,875.00	Many of the various pressure relief discharges do not discharge into tundishes but directly onto the floor. This is a health and safety hazard.	All discharges to terminate within a tundish and connected directly to a drain.	N/A					£1,875.00							
Internal	1	Boiler house	G	Mechanical Services	Heating Plant & Auxiliaries	Expansion Vessels	Unit rate	5	£250.00	D	1	R	15	Urgent	£1,250.00	Expansion vessels do not appear to have correct number of valves and drain off points. To be reviewed.	Expansion vessels need to be reviewed and valves drain off points installed if required.	N/A					£1,250.00							
Internal	1	Boiler house	G	Mechanical Services	Heating Distribution	Heating Services Thermal Insulation	Unit rate	5	£1,750.00	D	1	Q	30	Urgent	£1,750.00	Heating pipework within boiler houses have insulation to the majority of pipework, but there are a number of sections of missing insulation. All valves to be provided with insulated jackets	Install thermal insulation to all missing sections of pipework within boiler houses and install insulation jackets to all valves.	N/A					£1,750.00							

Internal	1	Throughout	G	Mechanical Services	Heating Distribution	Heating Distribution Pipework	Unit rate	1	£30,000.00	C	3	R	25	3 to 5 years	£30,000.00	Existing distribution is coming to end of life and is a one pipe heating circuit throughout.	Consideration should be given to replacing existing heating distribution system with a new 2 pipe VT heating distribution system. All pipework should be insulated throughout their length.	N/A							£30,000.00					
Internal	1	Throughout	G	Mechanical Services	Heating Distribution	Radiators	Unit rate	100	£500.00	C	3	R	20	3 to 5 years	£25,000.00	Some of the existing radiators are nearing their end of life and looking tired and outdated.	Consideration should be given to replacing the existing radiators with new LST radiators and thermostatic mixing valves to ensure that the heating system can operate correctly and be controllable.	N/A							£25,000.00					
Internal	1	Boiler house	G	Mechanical Services	Heating Controls	BMS	Unit rate	1	£10,000.00	C	3	R	20	3 to 5 years	£10,000.00	Existing controls are old and very basic	The existing basic controls should be considered to be replaced with a more energy efficient BMS system to control all heating and hot water systems.	N/A							£10,000.00					
Internal	1	Boiler house	G	Mechanical Services	Hot Water Plant & Equipment	Calorifiers	Unit rate	5	£2,000.00	B	3	R	20	3 to 5 years	£10,000.00	The calorifiers are coming to the end of their life and are no longer manufactured.	We would recommend to look at replacing the existing calorifiers with new more energy efficient models.	N/A							£10,000.00					
Internal	1	Throughout	G	Mechanical Services	Hot & Cold Water Distribution Services	Hot and Cold Water Pipework	Unit rate	1	£25,000.00	C	3	R	25	3 to 5 years	£25,000.00	Existing distribution is coming to end of life.	Replace existing hot and cold water distribution system with a new.	N/A							£25,000.00					
Internal	1	W.C.'s	G	Mechanical Services	Hot & Cold Water Distribution Services	Toilets	Unit rate	3	£400.00	B	2	R	25	within 2 years	£1,200.00	Existing black toilet cisterns may contain asbestos, also the overflow discharges onto the floor.	Replace black toilet cistern and toilets with new close coupled toilets with built in overflows.	N/A						£1,200.00						
Internal	1	W.C.'s	G	Electrical Services	Communication Services	Toilets	Unit rate	8	£300.00	C	2	R	25	3 to 5 years	£2,400.00	Wi-Fi access to the internet for all bedrooms	Install 2 No IT/Data cables from the data rack to each of the bedroom corridors and install a Wi-Fi module in each corridor.	N/A							£2,400.00					
Internal	1	Laundry	G	Mechanical Services	Mechanical Ventilation	Galvanised Ductwork Systems	Unit rate	1	£900.00	B	2	R	25	Urgent	£900.00	There is a possibility of lint build-up in the laundry dryers extract ductwork. It was not clear if it is possible to clean ducts.	Arrange where necessary for the installation of access panels in the duct and clean the ducts to remove any build-up of lint.	N/A					£900.00								
Internal	1	Main Entrance	G	Mechanical Services	Heating Distribution	Fan Convectors	Unit rate	1	£2,500.00	C	2	R	25	within 2 years	£2,500.00	Reception fan convector is in poor condition	Replace the existing fan convector with a new unit.	N/A						£2,500.00						
Internal	1	Boiler House	G	Electrical Services	Sub-mains switchgear	Sub distribution wiring and containment systems	Unit rate	1	£2,500.00	C	2	R	25	within 2 years	£350.00	Controls cabling within Blue wing boiler house very untidy and trunking lid missing.	The controls wiring in the blue wing boiler house needs tiding up and the trunking lid installed	N/A						£350.00						
Internal	1	Boiler house	G	Electrical Services	Protection Systems	Fire Alarm Installations (Inc., call points, sounders and detection)	Unit rate	1	£75.00	C	2	R	25	within 2 years	£75.00	Fire alarm detector hanging down supported by cables.	Re-fix the smoke detector to the soffit.	N/A						£75.00						
Internal	1	Sluice Rooms	G	Mechanical Services	Mechanical Ventilation	Local extract fans	Unit rate	4	£750.00	C	2	R	25	within 2 years	£3,000.00	No extract fans in the sluice rooms.	Install a trickle vent fan in the sluice rooms with a PIR to bring the fan up to full speed when a person enters the room.	N/A						£3,000.00						
External	1	Courtyard by delivery entrance		Mechanical Services	Mechanical Ventilation	Local extract fans	Unit rate	1	£500.00	B	2	R	25	3 to 5 years	£500.00	Cooking smells entering the building and courtyard by delivery entrance.	Review and modify the existing ductwork to reduce the smells entering the rooms when doors and windows are open.	N/A							£500.00					

Appendix 2

Care Home Services Check List

Care Home Services Check List
Briar Close House HOP

TROUP BYWATERS + ANDERS

Service	Standard Requirement	Currently Installed	Possible Enhancement	Comments
Mechanical Services				
Central heating boiler	✓	✓		1 No Boiler per bedroom block and 1 No boiler for the Amenity Area.
Optimised Boiler Controls			✓	The boilers have a form of heating control but this appears not to be an optimised system, the controls should be replaced with a formal optimised control system.
Central Domestic Water Generation	✓	✓		1 No calorifier per bedroom block and 1 No calorifier for the Amenity Area.
LST Radiators with Thermostatic Valves	✓	✓		The majority of the building has LST radiators, but some rooms have panel radiators which at one point had covers which are now missing. All radiators should be LST
En-suite toilets with Wash Hand Basins	✓		✓	No bedrooms have been provided with En-suite facilities
Wash hand Basins in bedrooms		✓		
Thermostatic Mixing Valves to Wash Hand Basins	✓	✓		
Communal Toilets + Wash Hand Basins	✓	✓		2 No communal toilets per bedroom wing provided,

Care Home Services Check List
Briar Close House HOP

TROUP BYWATERS + ANDERS

Service	Standard Requirement	Currently Installed	Possible Enhancement	Comments
Communal Assisted Bathrooms	✓	✓		1 No assisted bathroom per bedroom wing provided.
Toilet Extract Fans with PIR Control	✓	✓		It was not clear if the toilet extract fans had been switched off, these need to be checked to ensure that the fans are fully operational and working.
Bedrooms Naturally Ventilated	✓	✓		
Sluice Rooms with Hand Wash Facilities	✓	✓		4 No sluices, one per bedroom wing installed with a stainless steel sluice and sink installed in a separate room to the resident's washing/toilet facilities. Ceramic WHB provided for hand washing.
Water Fittings and Equipment Complies With Water Supply Regulations	✓		✓	It was not clear if all of the installed flexible connections and supplies to Laundry equipment or kitchen equipment and external taps meet these requirements and this needs to be verified.
G3 Regulations – Discharge pipes/condensate drains.	✓		✓	Some discharge pipework do not drain to a gully but just onto the floor which could leak out into corridors.
Kitchen Supply and Extract Ventilation System	✓	✓		Kitchen canopy and ventilation system to current standards installed. Possible issues

Care Home Services Check List
Briar Close House HOP

TROUP BYWATERS + ANDERS

Service	Standard Requirement	Currently Installed	Possible Enhancement	Comments
				with exhaust location causing smells to the court yard area.
Gas Interlock system with Kitchen Ventilation System.	✓	✓		Gas proving system with ventilation interlocks fitted, Co monitoring, emergency stop button and gas shut off valve installed.
Gas supply installation complies with gas regulations.	✓		✓	There appears not to be an overall Gas solenoid installed.
Installation of sprinklers to the building to BS9251:2014.	✓		✓	Currently the building does not have any sprinkler installed consideration should be given to installing a sprinkler tank and pumps to protect the building.
Electrical Services				
Main LV incoming Switchgear Suitable for incoming load		✓		
Remote Distribution Boards up to Current Standards		✓	✓	All remote distribution boards have been replaced with new boards, there are a couple of distribution boards that should be replaced.
Electrical Wiring Has Been Regularly Tested and Report Issued		✓	✓	Distribution system was last tested on 3rd August 2018. The building should be rewired to bring the electrical system up to current standards.

Care Home Services Check List
Briar Close House HOP

TROUP BYWATERS + ANDERS

Service	Standard Requirement	Currently Installed	Possible Enhancement	Comments
Fire Alarm System installed to BS5839 P1 - L1 + M	✓		✓	System is not to BS5839 L1 standard, but this may be due to the Managed fire detection and evacuation process for the care home. We understand that there is a project being detailed to replace the existing fire alarm system with a new system.
Sounders In All Bedrooms	✓		✓	Currently Audio levels not as per BS5839 for a sleeping accommodation and need to be uprated.
VAD's to All bedrooms	✓		✓	Currently there are no VAD's installed in any of the areas.
Nurse Call System Throughout The Building	✓	✓		Currently the building has been provided with a full nurse call system.
LED Lights to Bedrooms (300 Lux)	✓		✓	Existing pendent luminaire has a GLS lamp fitted and will not achieve 300 lux in the bedrooms. Replace the GLS lamp with dimmable LED lamp and where necessary replace the dimmer switches to be comparable with the LED lamp. Additional ceiling mounted luminaires should be installed.
General LED Lighting to all areas			✓	Upgrade all luminaires to LED

Care Home Services Check List
Briar Close House HOP

TROUP BYWATERS + ANDERS

Service	Standard Requirement	Currently Installed	Possible Enhancement	Comments
Electrical accessories with contrast colour to the wall finish	✓		✓	Switches and sockets in the bedrooms are generally white in colour and should be replaced with a switch with a contrast colour to the wall finish.
Emergency Lighting to Bedroom to BS5266	✓		✓	None fitted at present, all rooms should be provided with Emergency luminaires.
Table Lamp in Bedroom	✓			It was not clear if a table lamp had been provided as the bedrooms were empty.
2 No SSO to each Bedroom	✓			Generally rooms had two sockets for general use.
Small power for table lamps and hospital beds		✓	✓	Bedrooms should be provided with a power supply for a hospital bed and for a table lamp and possible use of a television. All accessories should be provided with a colour contrast plate finish.
Door Guard Systems to external Doors		✓		All external doors have been provided with First Q Wander guard system.
Door Access Controls to External Doors		✓		The main entrance doors have been provided with a door access system.
Emergency Lighting to Corridors and Communal Areas	✓	✓		

Care Home Services Check List
Briar Close House HOP

TROUP BYWATERS + ANDERS

Service	Standard Requirement	Currently Installed	Possible Enhancement	Comments
Illuminated Emergency Exit Signage to All Escape Routes	✓		✓	The current signs have Non-maintained emergency luminaires installed adjacent to the signs but the signs are not clear when the normal lighting is off. Not all changes in direction have been provided with direction signs.
Residents Access to Telephones	✓	✓		Residents have access to a pay phone located in the main entrance hall/communal area. Some residents utilise mobile phones.
Access to Internet			✓	Currently one resident wishes to use the internet and he has to use the main communal area for his computer. The office area has a wi-fi system, but, none of the bedrooms have Wi-Fi access. It would be beneficial to install wi-fi to all bedroom blocks.
Intruder Alarm System		✓		The building has been provided with an intruder alarm system to all external doors.
Hearing Loops to Communal Areas and Offices	✓		✓	As far as we could see there was no hearing loop installed in the building.
Disabled Hoists and Lifts to Upper Levels	✓			The only hoists currently installed form part of the assisted baths, there are no level changes requiring disabled hoists. The

Care Home Services Check List
Briar Close House HOP

TROUP BYWATERS + ANDERS

Service	Standard Requirement	Currently Installed	Possible Enhancement	Comments
				Centre Staff will need to access each residents care needs to establish if any bedroom hoists/lifts would be required.
CCTV Cameras to Main Entrance and around building	✓			Not sure if any CCTV have been installed for this building.
TV Aerial to All Bedrooms		✓		Each bedroom have been provided with TV outlet by the power sockets.

TROUP
BYWATERS
+ ANDERS

tbanda.com

Appendix E

Structural Report

CONSULTING CIVIL, STRUCTURAL,
HIGHWAY AND TRANSPORTATION ENGINEERS

GCA

Specific Structural Appraisal

at

Briar Close House HOP
Briar Close
Borrowash
Derby
DE72 3GB

for

Faithful & Gould

Ref: 7754c

Date: 9th November 2018

www.gca-consulting.com

CONTENTS

1. Introduction

2. General Observations

3. Two Storey Section – Roof Inspection

4. Conclusions & Recommendations

Appendix A- Photographs
Appendix B- Google map sketch-SK01
Appendix C- Design Guide Requirement

Specific Structural Appraisal

Briar Close House

1. Introduction

101. Our brief was to undertake a specific structural appraisal of the premises as outlined below:

- Investigate the robustness of the roof structure over the two storey section only.

102. We were instructed to undertake the above investigation by Faithful & Gould.

103. We have been requested to report on any apparent defect, giving an opinion as to cause and structural significance, together with recommendations for further investigations if required, or where appropriate suggest in outline only the scope of any necessary remedial works, including general advice about the likely effects and need to treat any nearby trees and vegetation where it could affect the structure.

104. External inspection of the roof has been carried out from ground level by visual and optical sighting and without special access arrangements we cannot confirm that obscured parts are free from defect.

105. For access into the roof space, we assume that the hatch will be safely accessible, be at least 700x550mm and crawl boards in place. If the hatch is too small or if crawl-boards are not in place an inspection will be conducted as far as is considered safe, this may be limited to a visual inspection from the loft hatch.

106. The inspecting Engineer has not investigated the extraction of minerals.

107. The premises and site have not been tested for any form of contamination, pollution or any other environmental impairment, including the presence of invasive non-native plants, and we are unable to make any comment in this regard.

108. Whilst we have used all reasonable skill and care in preparing this report, it should be appreciated that we cannot offer any guarantee that the inspected areas will be free from future defects or that existing ones will not suffer from further deterioration.

109. All observations are referenced as left or right hand as though observed from outside the front of the premises viewing towards the front elevation, and all observations in the roof space or dark spaces were made with the aid of a hand held torch light.

2. GENERAL OBSERVATIONS

201. The premises were visited by GCA Chartered Engineer on the morning of Friday the 9th of November 2018 and at the time of the survey the weather was overcast but dry.

202. The premises comprise a two storey building of concrete and masonry construction thought to have been built some 40 years ago and it has single storey wings abutting the rear, right and left hand side elevations. (**See Photo 01 and GCA sketch Sk01**)

203. The ground around the premises slopes down from front to rear and the footprint of the building is on a relatively level ground which is some 1m lower than the public road adjacent to the main entrance area. (**See Photo 02**)

204. There is a bitumen paved front drive and car parking area adjacent to the buildings main entrance. (**See Photo 01**)

3. TWO STOREY SECTION – ROOF INSPECTION

External Observations

Front Gable

301. The pitched roof over the building is covered with concrete interlocking tiles which shows no evidence of significant distortion to the ridge, however there is moss growing on the tiles. (**See Photo 03**)

302. The gable has one uPVC window each, at ground and first floors, and there is an exposed concrete string at first floor level and metal cladding panels above the windows; there are no structurally significant distortion or bowing of the front gable. (**See Photo 01**)

303. The mortar pointing on the right hand verge has spalled and cracked, the tiles near the eaves have a minor distortion and a reduced overlap of the tile. (**See Photo 04**)

304. There is minor cracking of the pointing on the left hand verge, however the lap on the penultimate tile to the edge has not distorted. (**See Photo 05**)

305. There is a 1mm-2mm stepped crack in the bottom right hand corner of the gable and a further hairline stepped crack of a relatively recently repointed adjacent crack. (**See Photo 06**)

Left Hand Side Elevation

306. The elevation has a pre-cast concrete guttering at eaves level and uPVC windows. (**See Photo 07**)

307. There is no evidence of distortion to the concrete roof gutter nor brickwork near the eaves.

Right Hand Side Elevation

308. The elevation also has a pre-cast concrete guttering at eaves level and uPVC windows. (**See Photo 08**)

309. There is no evidence of distortion to the concrete roof gutter nor brickwork near the eaves.

310. There is a tree some 6m tall approximately 8m from the front-most panel.

Rear Gable

311. There is no evidence of significant distortion to the brickwork. (**See Photo 09**)

Internal Observations

312. The roof is underdrawn with plastic reinforced sarking felt and comprises of proprietary light timber trusses spaced approximately 600mm apart. (**See Photo 10**)

313. The timbers of the truss are approximately 100mm deep and 40mm thick and additional horizontal members have been added between truss members to support Services in the roof space. (**See Photo 11**)

314. The roof structure does not have a timber diagonal bracing and has only one longitudinal brace.

315. There is no evidence of positive connection between the trusses and the gables, however there is no evidence of racking or general distortion of the structure.

4. CONCLUSIONS & RECOMMENDATIONS

401. Our inspection has not revealed any significant defect to the roof structure, however proprietary light timber trusses are known to lack sufficient sideways robustness. Local wind speeds and location of the building can affect the vulnerability of a roof structure to horizontal wind forces.

402. The slipped tiles and spalling of the mortar pointing on the roof verge is thought to be due to the concentration of wind pressure near the edges of structures and lack of robustness of the gables.

403. We recommend that consideration should be given to improving the robustness of the roof structure by introducing diagonal timber bracings along the right and left hand pitches. (**See Appendix C for requirements for diagonal bracings for pitched roofs**)

404. Due to the difficulties in retrofitting roof bracing members, we recommend that the roof space is accessed internally and at least three additional parallel lines of longitudinal bracing introduced, and diagonal bracing members introduced along the pitches.

405. We recommend that the trusses adjacent to the gables are fixed to the masonry using mild steel metal straps spaced at no more than 1200mm apart along the top and bottom booms.

406. We recommend that a roofing contractor inspects the conditions of the battens near the gables and repair slipped tile.

407. The stepped crack at the bottom right hand corner of the front gable is thought to be due to minor foundation movement, we recommend that the adjacent gutter is inspected for leakages and defects, and the drains serving the frontage CCTV surveyed.

408. We recommend that if after the inspection of the drains no significant defects are found, the cracks in the brickwork and roof verge are repointed with matching soft lime mortar as part of the routine maintenance of the premises and re-inspected 12 months after.

Emeka Nwosu
B. Eng, Msc(Eng), C.Eng, M.I.C.E.
(Structural Engineer)

Checked By GTC

File Ref: 7754C
Date: 19th November 2018

Appendix A- Photographs

Photo 01

Photo 02

Photo 03

Photo 04

Photo 05

Photo 06

Photo 07

Photo 08

Photo 09

Photo 10

Photo 11

Appendix B- Google map sketch-SK01

GCA Consulting Ltd Babington Lodge 128 Green Lane Derby DE1 1RY	Project Briar Close House				Job No. 7754c	
	Title Google Plan View				Drawing No./Rev. SK 01	
	Drawn by EN	Date 14/11/18	Chk'd by GTC	Date 16/11/18	App'd by GTC	Date 16/11/18

NOT TO SCALE

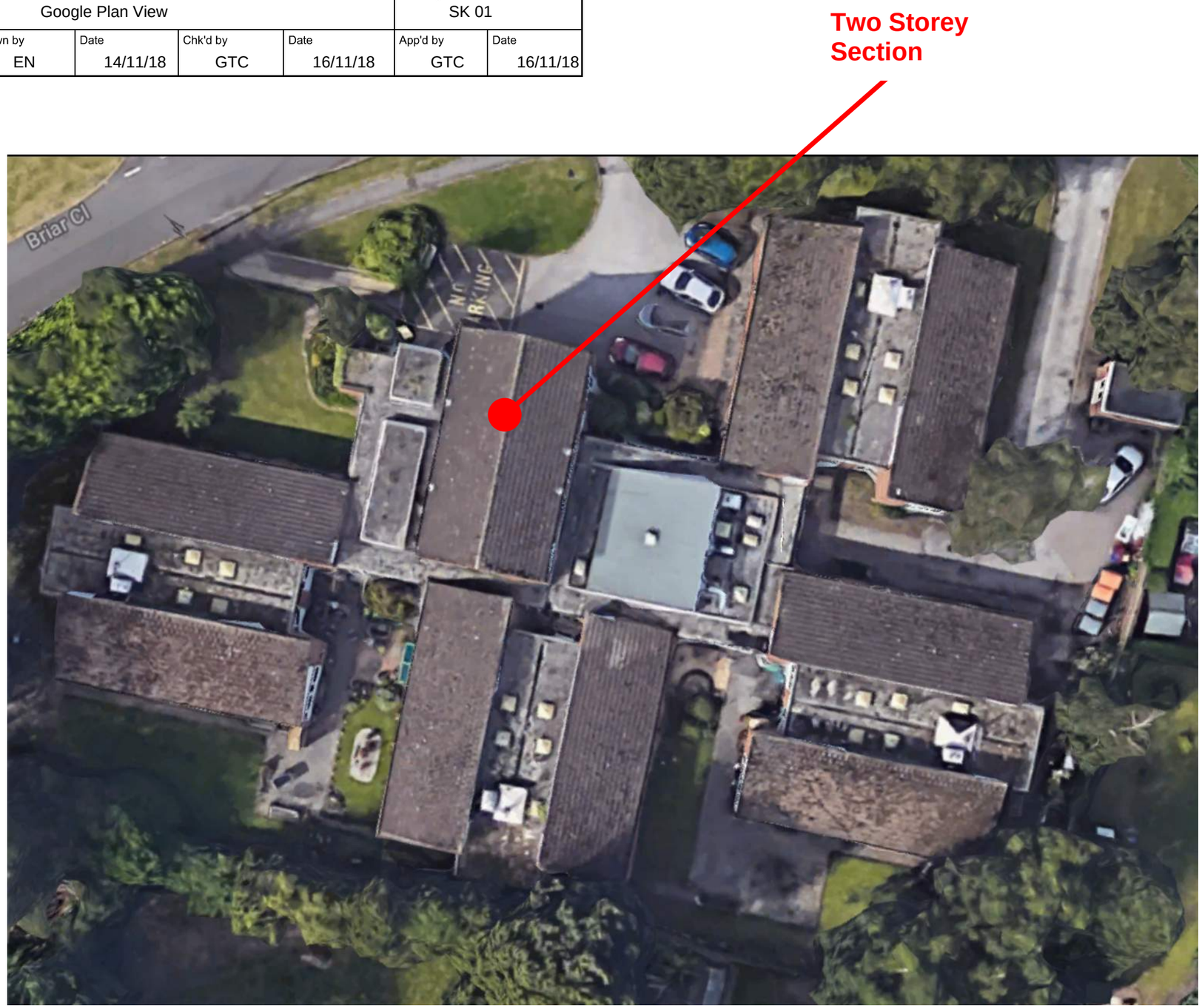

Appendix C- Design Guide Requirement

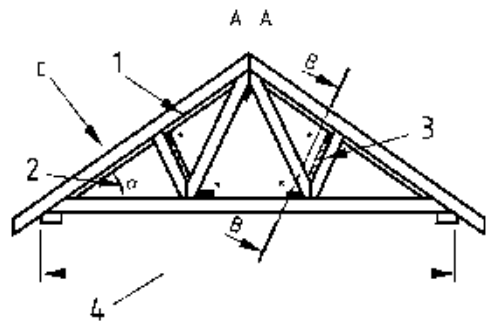

Section A-A (using Fink trusses)

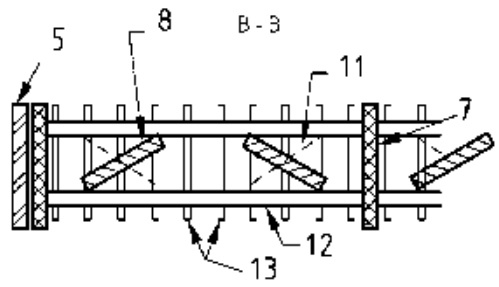

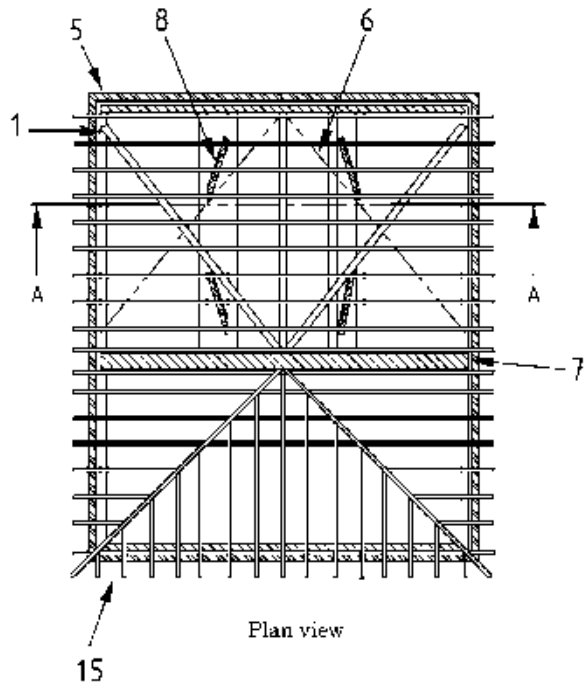

Plan view

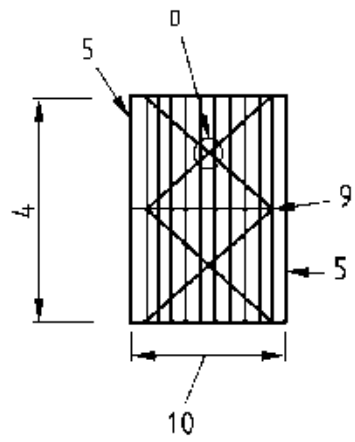

Plan of rafter diagonal bracing layout for narrow fronted detached roofs (rafter braces cross)

Section A-A (using WW trusses)

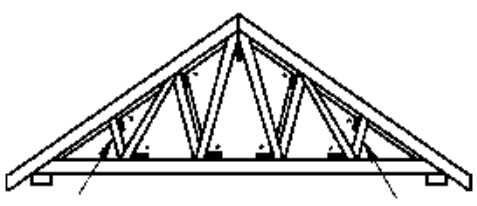

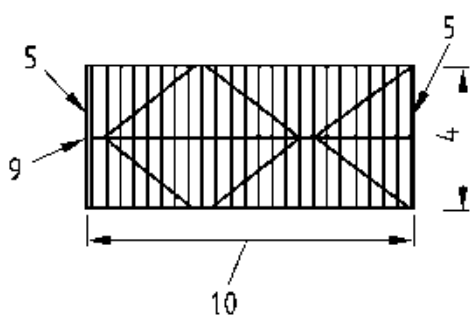

Plan of rafter diagonal bracing layout for wider fronted detached roofs (rafter braces do not need to cross)

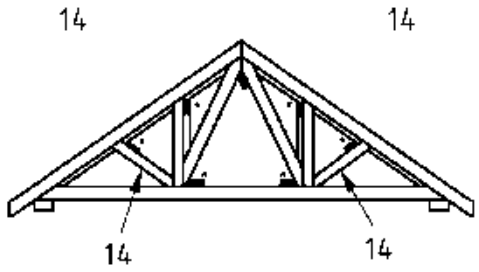

Section A-A (using Fan trusses)

Figure A.3 — Standard bracing for rafter and web members of duopitch trussed rafters

© BSI 2006

Licensed copy:GCA UK Ltd, 15/11/2018, Uncontrolled Copy, © BSI

Appendix F

Cost Data & Cost Summary Sheets

Condition Ranking **Priority** **Type**

ROOM DESCRIPTION				ROOM FABRIC			CONDITION SURVEY											PREDICTED REPLACEMENT (£1s)						Total
Internal / External	Building	Room No. / Name	Floor	Element	Element group	Sub element group	Unit rate	Item quantity	Standard Rate	CONDITION RANK	PRIORITY	TYPE	Typical Life from new (YEARS)	Estimated Remaining Useful Design Life (YEARS)	Cost	Disrepair Narrative / General Comments	Remedial Works	1	1-2	3-5	5-10	10-15	15-25	
																		Priority 1 - 2018/19	Priority 2 - 2019/20	Priority 3 - 2020/23	Priority 4 - 2023/28	Priority 5 - 2028/33	Priority 6 - 2033/42	Total
External Areas	1	External	0	Fencing	Fencing & Security	Timber boards	m	20.00	£106.50	D	1	F	15	Urgent	2130.00	Timber fencing and gates to secure rear and sides of property do not have furniture suitable to allow fire egress.	Renew for new fencing and gates with escape facility.	£2,130.00						£2,130.00
External Areas	1	External	0	Fencing	Fencing & Security	Timber boards	m	20.00	£106.50	A	6	F	15	Renew	2130.00	Timber fencing and gates to secure rear and sides of property do not have furniture suitable to allow fire egress.	Renew for new fencing and gates with escape facility.						£2,130.00	£2,130.00
External Areas	1	External	0	External Landscaping	Hard Landscaping	Tarmacadam	m2	30.00	£120.00	B	2	R	20	Within 2 years	3600.00	Foot paths too narrow to allow wheelchairs or persons with mobility aids o pass.	Form passing places along footpaths to allow occupants to pass without moving on to grassed areas.		£3,600.00					£3,600.00
External Areas	1	External	0	External Landscaping	Hard Landscaping	Tarmacadam	m2	100.00	£120.00	B	2	R	20	Within 2 years	12000.00	Utilise more of the external grounds to extend the recreational seating areas, avoid gravel and uneven surfaces.	Refurbish external seating areas.		£12,000.00					£12,000.00
External Areas	1	External	0	Ramps & Steps	Ramp	Ramps to exit doors	Ea	12.00	£850.00	C	2	H	20	Within 2 years	£10,200.00	Brick ramps steep and potential to be slippery when wet, concrete ramps steep inadequate handrails	Allow to remove external sloped ramps to exit doors from building. Install new concrete ramps with landing and handrails		£10,200.00					£10,200.00
External	1	External	0	Building Superstructure	Roofs - pitched	Concrete tiles	m2	1195.00	£143.00	B	6	G	40	5-10 years	£170,885.00	Existing concrete interlocking tiles appears weatherproof but now nearing the end of useable life	Allow to remove and refit concrete interlocking tiles to pitched roofs and renew including new insulation.				£170,885.00			£170,885.00
External	1	External	0	Building Superstructure	Roofs - flat	Mineral felt	m2	475.00	£160.00	C	2	G	20	Within 2 years	£76,000.00	Existing covering is felt with polystyrene tiles and chippings on top, aged and deteriorating many patch repairs evident.	Remove then allow for cut to falls insulation and mineral felt covering.		£76,000.00					£76,000.00
External	1	External	0	Building Superstructure	Roofs - flat	Mineral felt	m2	475.00	£160.00	A	6	R	20	15-25 years	£76,000.00	Renewal of replacement covering	Renew to the building regulations						£76,000.00	£76,000.00
External	1	External	0	Building Superstructure	Roof Drainage	Concrete gutters	m	160.00	£60.00	C	2	G	25	Within 2 years	£9,600.00	Gutters to mono pitched roofs are concrete sectional box gutters. Have been relined with felt as a retrospective repair, some leaking evident.	Reline with a cold applied liquid gutter lining system e.g Sika		£9,600.00					£9,600.00
External	1	External	0	Building Superstructure	Roof lights	Propriety Unit	Nr	20.00	£1,107.00	C	2	G	25	Within 2 years	£22,140.00	Aged polycarbonate rooflights.	Renew in conjunction with roof recover		£22,140.00					£22,140.00
External	1	External	0	Building Superstructure	Windows	PVCu windows	m2	167.00	£767.00	B	5	G	35	10-15 years	£128,089.00	Existing windows throughout the site are PVCu double glazed, UV fading and weathering evident.	Replace					£128,089.00		£128,089.00
1	1	External	0	Building Superstructure	Doors	PVCu Doors	Nr	12.00	£1,279.00	B	5	S	30	10-15 years	£15,348.00	Existing PVCu throughout the site are PVCu double glazed, UV fading and weathering evident.	Recommend replacement with powder coated aluminium for durability					£15,348.00		£15,348.00
External	2	External	1	Building Superstructure	Doors	PVCu Doors	Nr	1.00	£3,821.00	C	2	S	30	Within 2 years	£3,821.00	The main entrance PVCu double doorset is not powered, has access control and slightly raised threshold, which combined with the double doorsets may pose awkward for ambulance crews.	Recommend replacement with powder coated aluminium for durability		£3,821.00					£3,821.00
Internal	1	Dining Room / Living Rooms	0	Internal finishes	Decorations	Emulsion paint to ceiling	m2	225.00	£11.00	B	3	E	5	3-5 years	£2,475.00	Generally good condition	Redecorate			£2,475.00				£2,475.00
Internal	1	Dining Room / Living Rooms	0	Internal finishes	Decorations	Emulsion paint to ceiling	m2	225.00	£11.00	A	4	E	5	5-10 years	£2,475.00	Cyclical redecorations	Redecorate				£2,475.00			£2,475.00
Internal	1	Dining Room / Living Rooms	0	Internal finishes	Decorations	Emulsion paint to ceiling	m2	225.00	£11.00	A	5	E	5	10-15 years	£2,475.00	Cyclical redecorations	Redecorate					£2,475.00		£2,475.00
Internal	1	Dining Room / Living Rooms	0	Internal finishes	Decorations	Emulsion paint to ceiling	m2	225.00	£11.00	A	6	E	5	15-25 years	£2,475.00	Cyclical redecorations	Redecorate						£2,475.00	£2,475.00
Internal	1	Dining Room / Living Rooms	0	Internal finishes	Decorations	Emulsion paint to ceiling	m2	225.00	£11.00	A	6	E	5	15-25 years	£2,475.00	Cyclical redecorations	Redecorate						£2,475.00	£2,475.00
Internal	1	Dining Room / Living Rooms	0	Internal finishes	Decorations	Wallpaper	m2	475.00	£11.29	B	3	E	5	3-5 years	£5,362.75	Generally good condition	Redecorate			£5,362.75				£5,362.75
Internal	1	Dining Room / Living Rooms	0	Internal finishes	Decorations	Wallpaper	m2	475.00	£11.29	A	4	E	5	5-10 years	£5,362.75	Cyclical redecorations	Redecorate				£5,362.75			£5,362.75
Internal	1	Dining Room / Living Rooms	0	Internal finishes	Decorations	Wallpaper	m2	475.00	£11.29	A	5	E	5	10-15 years	£5,362.75	Cyclical redecorations	Redecorate					£5,362.75		£5,362.75
Internal	1	Dining Room / Living Rooms	0	Internal finishes	Decorations	Wallpaper	m2	475.00	£11.29	A	6	E	5	15-25 years	£5,362.75	Cyclical redecorations	Redecorate						£5,362.75	£5,362.75
Internal	1	Dining Room / Living Rooms	0	Internal finishes	Decorations	Wallpaper	m2	475.00	£11.29	A	6	E	5	15-25 years	£5,362.75	Cyclical redecorations	Redecorate						£5,362.75	£5,362.75
Internal	1	Dining Room / Living Rooms	0	Internal finishes	Floor finishes	Carpet tile	m2	225.00	£59.00	B	4	E	15	5-10 years	£13,275.00	Generally good condition	Replace				£13,275.00			£13,275.00
A	1	Dining Room / Living Rooms	0	Internal finishes	Floor finishes	Carpet tile	m2	225.00	£59.00	A	6	E	15	15-25 years	£13,275.00	Cyclical replacement	Replace						£13,275.00	£13,275.00
Internal	1	Circulation Areas	0	Internal finishes	Decorations	Emulsion paint to ceiling	m2	356.00	£11.00	B	3	E	5	3-5 years	£3,916.00	Generally good condition	Redecorate			£3,916.00				£3,916.00
Internal	1	Circulation Areas	0	Internal finishes	Decorations	Emulsion paint to ceiling	m2	356.00	£11.00	A	4	E	5	5-10 years	£3,916.00	Cyclical redecorations	Redecorate				£3,916.00			£3,916.00
Internal	1	Circulation Areas	0	Internal finishes	Decorations	Emulsion paint to ceiling	m2	356.00	£11.00	A	5	E	5	10-15 years	£3,916.00	Cyclical redecorations	Redecorate					£3,916.00		£3,916.00
Internal	1	Circulation Areas	0	Internal finishes	Decorations	Emulsion paint to ceiling	m2	356.00	£11.00	A	6	E	5	15-25 years	£3,916.00	Cyclical redecorations	Redecorate						£3,916.00	£3,916.00
Internal	1	Circulation Areas	0	Internal finishes	Decorations	Emulsion paint to ceiling	m2	356.00	£11.00	A	6	E	5	15-25 years	£3,916.00	Cyclical redecorations	Redecorate						£3,916.00	£3,916.00
Internal	1	Circulation Areas	0	Internal finishes	Decorations	Wallpaper	m2	912.00	£11.29	B	3	E	5	3-5 years	£10,296.48	Generally good condition	Redecorate			£10,296.48				£10,296.48
Internal	1	Circulation Areas	0	Internal finishes	Decorations	Wallpaper	m2	912.00	£11.29	A	4	E	5	5-10 years	£10,296.48	Cyclical redecorations	Redecorate				£10,296.48			£10,296.48
Internal	1	Circulation Areas	0	Internal finishes	Decorations	Wallpaper	m2	912.00	£11.29	A	5	E	5	10-15 years	£10,296.48	Cyclical redecorations	Redecorate					£10,296.48		£10,296.48
Internal	1	Circulation Areas	0	Internal finishes	Decorations	Wallpaper	m2	912.00	£11.29	A	6	E	5	15-25 years	£10,296.48	Cyclical redecorations	Redecorate						£10,296.48	£10,296.48
Internal	1	Circulation Areas	0	Internal finishes	Decorations	Wallpaper	m2	912.00	£11.29	A	6	E	5	15-25 years	£10,296.48	Cyclical redecorations	Redecorate						£10,296.48	£10,296.48
Internal	1	Circulation Areas	0	Internal finishes	Floor finishes	Carpet tile	m2	356.00	£59.00	B	4	E	15	5-10 years	£21,004.00	Generally good condition	Replace				£21,004.00			£21,004.00
A	1	Circulation Areas	0	Internal finishes	Floor finishes	Carpet tile	m2	356.00	£59.00	A	6	E	15	15-25 years	£21,004.00	Cyclical replacement	Replace						£21,004.00	£21,004.00
Internal	1	Kitchen / Kitchenettes	0	Internal finishes	Decorations	Emulsion paint to ceiling	m2	24.00	£11.00	B	3	H	5	3-5 years	£264.00	Generally good condition	Redecorate			£264.00				£264.00
Internal	1	Kitchen / Kitchenettes	0	Internal finishes	Decorations	Emulsion paint to ceiling	m2	24.00	£11.00	A	4	E	5	5-10 years	£264.00	Cyclical redecorations	Redecorate				£264.00			£264.00

Condition Ranking **Priority** **Type**

ROOM DESCRIPTION				ROOM FABRIC			CONDITION SURVEY											PREDICTED REPLACEMENT (£1s)						Total
Internal / External	Building	Room No. / Name	Floor	Element	Element group	Sub element group	Unit rate	Item quantity	Standard Rate	CONDITION RANK	PRIORITY	TYPE	Typical Life from new (YEARS)	Estimated Remaining Useful Design Life (YEARS)	Cost	Disrepair Narrative / General Comments	Remedial Works	1	1-2	3-5	5-10	10-15	15-25	
																		Priority 1 - 2018/19	Priority 2 - 2019/20	Priority 3 - 2020/23	Priority 4 - 2023/28	Priority 5 - 2028/33	Priority 6 - 2033/42	Total
Internal	1	Kitchen / Kitchenettes	0	Internal finishes	Decorations	Emulsion paint to ceiling	m2	24.00	£11.00	A	5	E	5	10-15 years	£264.00	Cyclical redecorations	Redecorate					£264.00		£264.00
Internal	1	Kitchen / Kitchenettes	0	Internal finishes	Decorations	Emulsion paint to ceiling	m2	24.00	£11.00	A	6	E	5	15-25 years	£264.00	Cyclical redecorations	Redecorate						£264.00	£264.00
Internal	1	Kitchen / Kitchenettes	0	Internal finishes	Decorations	Emulsion paint to ceiling	m2	24.00	£11.00	A	6	E	5	15-25 years	£264.00	Cyclical redecorations	Redecorate						£264.00	£264.00
Internal	1	Kitchen / Kitchenettes	0	Internal finishes	Decorations	Eggshell paint to walls	m2	76.00	£11.00	B	3	H	5	3-5 years	£836.00	Generally good condition	Redecorate			£836.00				£836.00
Internal	1	Kitchen / Kitchenettes	0	Internal finishes	Decorations	Eggshell paint to walls	m2	76.00	£11.00	A	4	E	5	5-10 years	£836.00	Cyclical redecorations	Redecorate				£836.00			£836.00
Internal	1	Kitchen / Kitchenettes	0	Internal finishes	Decorations	Eggshell paint to walls	m2	76.00	£11.00	A	5	E	5	10-15 years	£836.00	Cyclical redecorations	Redecorate					£836.00		£836.00
Internal	1	Kitchen / Kitchenettes	0	Internal finishes	Decorations	Eggshell paint to walls	m2	76.00	£11.00	A	6	E	5	15-25 years	£836.00	Cyclical redecorations	Redecorate						£836.00	£836.00
Internal	1	Kitchen / Kitchenettes	0	Internal finishes	Decorations	Eggshell paint to walls	m2	76.00	£11.00	A	6	E	5	15-25 years	£836.00	Cyclical redecorations	Redecorate						£836.00	£836.00
Internal	1	Kitchen / Kitchenettes	0	Internal finishes	Floor finishes	Sheet vinyl	m2	24.00	£95.00	B	4	H	15	5-10 years	£2,280.00	Generally good condition	Replace				£2,280.00			£2,280.00
Internal	1	Kitchen / Kitchenettes	0	Internal finishes	Floor finishes	Sheet vinyl	m2	24.00	£95.00	A	6	E	15	15-25 years	£2,280.00	Cyclical replacement	Replace						£2,280.00	£2,280.00
Internal	1	Kitchen / Kitchenettes	0	FF&E	FF&E	Worktop & Units	Item	1.00	£4,250.00	B	5	H	15	10-15 years	£4,250.00	Good condition	Replace					£4,250.00		£4,250.00
Internal	1	Kitchen / Kitchenettes	0	Door	Door	Solid veneer faced timber door (single) with vision panel	Item	4.00	£931.00	B	5	H	25	10-15 years	£3,724.00	Generally good condition	Replace					£3,724.00		£3,724.00
Internal	1	Toilets	0	Internal finishes	Decorations	Emulsion paint to ceiling	m2	24.00	£11.00	B	3	H	5	3-5 years	£264.00	Generally good condition	Redecorate			£264.00				£264.00
Internal	1	Toilets	0	Internal finishes	Decorations	Emulsion paint to ceiling	m2	24.00	£11.00	A	4	E	5	5-10 years	£264.00	Cyclical redecorations	Redecorate				£264.00			£264.00
Internal	1	Toilets	0	Internal finishes	Decorations	Emulsion paint to ceiling	m2	24.00	£11.00	A	5	E	5	10-15 years	£264.00	Cyclical redecorations	Redecorate					£264.00		£264.00
Internal	1	Toilets	0	Internal finishes	Decorations	Emulsion paint to ceiling	m2	24.00	£11.00	A	6	E	5	15-25 years	£264.00	Cyclical redecorations	Redecorate						£264.00	£264.00
Internal	1	Toilets	0	Internal finishes	Decorations	Emulsion paint to ceiling	m2	24.00	£11.00	A	6	E	5	15-25 years	£264.00	Cyclical redecorations	Redecorate						£264.00	£264.00
Internal	1	Toilets	0	Internal finishes	Decorations	Eggshell paint to walls	m2	76.00	£11.00	B	3	H	5	3-5 years	£836.00	Generally good condition	Redecorate			£836.00				£836.00
Internal	1	Toilets	0	Internal finishes	Decorations	Eggshell paint to walls	m2	76.00	£11.00	A	4	E	5	5-10 years	£836.00	Cyclical redecorations	Redecorate				£836.00			£836.00
Internal	1	Toilets	0	Internal finishes	Decorations	Eggshell paint to walls	m2	76.00	£11.00	A	5	E	5	10-15 years	£836.00	Cyclical redecorations	Redecorate					£836.00		£836.00
Internal	1	Toilets	0	Internal finishes	Decorations	Eggshell paint to walls	m2	76.00	£11.00	A	6	E	5	15-25 years	£836.00	Cyclical redecorations	Redecorate						£836.00	£836.00
Internal	1	Toilets	0	Internal finishes	Decorations	Eggshell paint to walls	m2	76.00	£11.00	A	6	E	5	15-25 years	£836.00	Cyclical redecorations	Redecorate						£836.00	£836.00
Internal	1	Toilets	0	Internal finishes	Floor finishes	Sheet vinyl	m2	24.00	£95.00	B	3	H	10	3-5 years	£2,280.00	Generally good condition	Replace			£2,280.00				£2,280.00
Internal	1	Toilets	0	Internal finishes	Floor finishes	Sheet vinyl	m2	24.00	£95.00	A	6	E	15	15-25 years	£2,280.00	Cyclical replacement	Replace						£2,280.00	£2,280.00
Internal	1	Toilets	0	Door	Door	Solid veneer faced timber door (single)	Item	4.00	£391.00	B	5	H	25	10-15 years	£1,564.00	Generally good condition	Replace					£1,564.00		£1,564.00
Internal	1	Bath / shower rooms	0	Internal finishes	Decorations	Emulsion paint to ceiling	m2	40.00	£11.00	B	3	H	5	3-5 years	£440.00	Generally good condition	Replace			£440.00				£440.00
Internal	1	Bath / shower rooms	0	Internal finishes	Decorations	Emulsion paint to ceiling	m2	40.00	£11.00	A	4	E	5	5-10 years	£440.00	Cyclical redecorations	Redecorate				£440.00			£440.00
Internal	1	Bath / shower rooms	0	Internal finishes	Decorations	Emulsion paint to ceiling	m2	40.00	£11.00	A	5	E	5	10-15 years	£440.00	Cyclical redecorations	Redecorate					£440.00		£440.00
Internal	1	Bath / shower rooms	0	Internal finishes	Decorations	Emulsion paint to ceiling	m2	40.00	£11.00	A	6	E	5	15-25 years	£440.00	Cyclical redecorations	Redecorate						£440.00	£440.00
Internal	1	Bath / shower rooms	0	Internal finishes	Decorations	Emulsion paint to ceiling	m2	40.00	£11.00	A	6	E	5	15-25 years	£440.00	Cyclical redecorations	Redecorate						£440.00	£440.00
Internal	1	Bath / shower rooms	0	Internal finishes	Decorations	Ceramic tiles to walls	m2	96.00	£234.00	B	3	H	5	3-5 years	£22,464.00	Generally fair condition, aging	Currently paint to walls, install ceramic tiles for hygiene and durability			£22,464.00				£22,464.00
Internal	1	Bath / shower rooms	0	Internal finishes	Floor finishes	Sheet vinyl	m2	40.00	£95.00	B	3	H	10	3-5 years	£3,800.00	Generally fair condition	Replace			£3,800.00				£3,800.00
Internal	1	Bath / shower rooms	0	Internal finishes	Floor finishes	Sheet vinyl	m2	40.00	£95.00	A	6	E	15	15-25 years	£3,800.00	Cyclical replacement	Cyclical replacement						£3,800.00	£3,800.00
Internal	1	Bath / shower rooms	0	Sanitaryware	WHB	Vitreous China	Item	6.00	£525.00	B	3	H	20	3-5 years	£3,150.00	In 6nr bathrooms - Generally fair condition	Replace			£3,150.00				£3,150.00
Internal	1	Bath / shower rooms	0	Sanitaryware	WHB	Vitreous China	Item	6.00	£525.00	A	6	H	20	15-25 years	£3,150.00	Cyclical replacement	Cyclical replacement						£3,150.00	£3,150.00
Internal	1	Bath / shower rooms	1	Sanitaryware	WC	Vitreous China	Item	6.00	£525.00	B	5	H	20	10-15 years	£3,150.00	In 1nr bathrooms - Good condition	Replace					£3,150.00		£3,150.00
Internal	1	Bath / shower rooms	0	Sanitaryware	Bath	Height adjustable bath	Item	5.00	£7,500.00	B	3	H	15	3-5 years	£37,500.00	Rise and fall height adjustable bath. Fair condition, aging	Replace			£37,500.00				£37,500.00
Internal	1	Bath / shower rooms	0	Sanitaryware	Bath	Height adjustable bath	Item	5.00	£7,500.00	A	6	H	15	15-25 years	£37,500.00	Rise and fall height adjustable bath. Fair condition, aging	Cyclical replacement						£37,500.00	£37,500.00
Internal	2	Bath / shower rooms	1	Sanitaryware	Bath	Height adjustable bath	Item	1.00	£7,500.00	B	5	H	15	10-15 years	£7,500.00	Rise and fall height adjustable bath. Good condition	Replace					£7,500.00		£7,500.00
Internal	1	Bath / shower rooms	0	Sanitaryware	Shower	Shower cubicle	Item	1.00	£3,500.00	B	4	H	10	5-10 years	£3,500.00	Good condition	Replace				£3,500.00			£3,500.00
Internal	1	Bath / shower rooms	0	Sanitaryware	Shower	Shower cubicle	Item	1.00	£3,500.00	A	6	H	10	5-10 years	£3,500.00	Cyclical replacement	Cyclical replacement						£3,500.00	£3,500.00
Internal	1	Bath / shower rooms	0	Door	Door	Solid veneer faced timber door (single)	Item	7.00	£391.00	B	3	H	25	3-5 years	£2,737.00	Appears generally good condition. Bathroom doors do not have own distinguishing colour.	Replace			£2,737.00				£2,737.00

Condition Ranking | Priority | Type

ROOM DESCRIPTION				ROOM FABRIC			CONDITION SURVEY											PREDICTED REPLACEMENT (£1s)						Total
Internal / External	Building	Room No. / Name	Floor	Element	Element group	Sub element group	Unit rate	Item quantity	Standard Rate	CONDITION RANK	PRIORITY	TYPE	Typical Life from new (YEARS)	Estimated Remaining Useful Design Life (YEARS)	Cost	Disrepair Narrative / General Comments	Remedial Works	1	1-2	3-5	5-10	10-15	15-25	
																		Priority 1 - 2018/19	Priority 2 - 2019/20	Priority 3 - 2020/23	Priority 4 - 2023/28	Priority 5 - 2028/33	Priority 6 - 2033/42	Total
Internal	1	Laundry	0	Internal finishes	Decorations	Emulsion paint to ceiling	m2	25.00	£11.00	B	3	H	5	3-5 years	£275.00	Generally good condition	Redecorate			£275.00				£275.00
Internal	1	Laundry	0	Internal finishes	Decorations	Emulsion paint to ceiling	m2	25.00	£11.00	A	4	E	5	5-10 years	£275.00	Cyclical redecorations	Redecorate				£275.00			£275.00
Internal	1	Laundry	0	Internal finishes	Decorations	Emulsion paint to ceiling	m2	25.00	£11.00	A	5	E	5	10-15 years	£275.00	Cyclical redecorations	Redecorate					£275.00		£275.00
Internal	1	Laundry	0	Internal finishes	Decorations	Emulsion paint to ceiling	m2	25.00	£11.00	A	6	E	5	15-25 years	£275.00	Cyclical redecorations	Redecorate						£275.00	£275.00
Internal	1	Laundry	0	Internal finishes	Decorations	Emulsion paint to ceiling	m2	25.00	£11.00	A	6	E	5	15-25 years	£275.00	Cyclical redecorations	Redecorate						£275.00	£275.00
Internal	1	Laundry	0	Internal finishes	Decorations	Eggshell paint to walls	m2	122.00	£11.00	B	3	H	5	3-5 years	£1,342.00	Generally good condition	Redecorate			£1,342.00				£1,342.00
Internal	1	Laundry	0	Internal finishes	Decorations	Eggshell paint to walls	m2	122.00	£11.00	A	4	E	5	5-10 years	£1,342.00	Cyclical redecorations	Redecorate				£1,342.00			£1,342.00
Internal	1	Laundry	0	Internal finishes	Decorations	Eggshell paint to walls	m2	122.00	£11.00	A	5	E	5	10-15 years	£1,342.00	Cyclical redecorations	Redecorate					£1,342.00		£1,342.00
Internal	1	Laundry	0	Internal finishes	Decorations	Eggshell paint to walls	m2	122.00	£11.00	A	6	E	5	15-25 years	£1,342.00	Cyclical redecorations	Redecorate						£1,342.00	£1,342.00
Internal	1	Laundry	0	Internal finishes	Decorations	Eggshell paint to walls	m2	122.00	£11.00	A	6	E	5	15-25 years	£1,342.00	Cyclical redecorations	Redecorate						£1,342.00	£1,342.00
Internal	1	Laundry	0	Internal finishes	Floor finishes	Sheet vinyl	m2	25.00	£95.00	B	3	H	10	3-5 years	£2,375.00	Generally good condition	Replace			£2,375.00				£2,375.00
Internal	1	Laundry	0	Internal finishes	Floor finishes	Sheet vinyl	m2	25.00	£95.00	A	6	H	10	15-25 years	£2,375.00	Cyclical replacement	Cyclical replacement						£2,375.00	£2,375.00
Internal	1	Laundry	0	Door	Door	Solid veneer faced timber door (single) with vision panel	Item	1.00	£931.00	B	5	H	25	10-15 years	£931.00	Generally good condition	Replace					£931.00		£931.00
Internal	1	Office	0	Internal finishes	Decorations	Emulsion paint to ceiling	m2	27.00	£11.00	B	3	H	5	3-5 years	£297.00	Generally good condition	Redecorate			£297.00				£297.00
Internal	1	Office	0	Internal finishes	Decorations	Emulsion paint to ceiling	m2	27.00	£11.00	A	4	E	5	5-10 years	£297.00	Cyclical redecorations	Redecorate				£297.00			£297.00
Internal	1	Office	0	Internal finishes	Decorations	Emulsion paint to ceiling	m2	27.00	£11.00	A	5	E	5	10-15 years	£297.00	Cyclical redecorations	Redecorate					£297.00		£297.00
Internal	1	Office	0	Internal finishes	Decorations	Emulsion paint to ceiling	m2	27.00	£11.00	A	6	E	5	15-25 years	£297.00	Cyclical redecorations	Redecorate						£297.00	£297.00
Internal	1	Office	0	Internal finishes	Decorations	Emulsion paint to ceiling	m2	27.00	£11.00	A	6	E	5	15-25 years	£297.00	Cyclical redecorations	Redecorate						£297.00	£297.00
Internal	1	Office	0	Internal finishes	Decorations	Eggshell paint to walls	m2	128.00	£11.00	B	3	H	5	3-5 years	£1,408.00	Generally good condition	Redecorate			£1,408.00				£1,408.00
Internal	1	Office	0	Internal finishes	Decorations	Eggshell paint to walls	m2	128.00	£11.00	A	4	E	5	5-10 years	£1,408.00	Cyclical redecorations	Redecorate				£1,408.00			£1,408.00
Internal	1	Office	0	Internal finishes	Decorations	Eggshell paint to walls	m2	128.00	£11.00	A	5	E	5	10-15 years	£1,408.00	Cyclical redecorations	Redecorate					£1,408.00		£1,408.00
Internal	1	Office	0	Internal finishes	Decorations	Eggshell paint to walls	m2	128.00	£11.00	A	6	E	5	15-25 years	£1,408.00	Cyclical redecorations	Redecorate						£1,408.00	£1,408.00
Internal	1	Office	0	Internal finishes	Decorations	Eggshell paint to walls	m2	128.00	£11.00	A	6	E	5	15-25 years	£1,408.00	Cyclical redecorations	Redecorate						£1,408.00	£1,408.00
Internal	1	Office	0	Internal finishes	Floor finishes	Carpet Tiles	m2	27.00	£95.00	B	3	H	10	3-5 years	£2,565.00	Generally fair condition	Replace			£2,565.00				£2,565.00
Internal	1	Office	0	Internal finishes	Floor finishes	Carpet Tiles	m2	27.00	£95.00	A	6	H	10	15-25 years	£2,565.00	Cyclical replacement	Cyclical replacement						£2,565.00	£2,565.00
Internal	1	Office	0	Door	Door	Solid veneer faced timber door (single) with vision panel	Item	2.00	£931.00	B	5	H	25	10-15 years	£1,862.00	Generally good condition	Replace					£1,862.00		£1,862.00
Internal	1	Bedrooms	0	Internal finishes	Decorations	Emulsion paint to ceiling	m2	353.00	£11.00	B	3	H	5	3-5 years	£3,883.00	Generally good condition	Redecorate			£3,883.00				£3,883.00
Internal	1	Bedrooms	0	Internal finishes	Decorations	Emulsion paint to ceiling	m2	353.00	£11.00	A	4	E	5	5-10 years	£3,883.00	Cyclical redecorations	Redecorate				£3,883.00			£3,883.00
Internal	1	Bedrooms	0	Internal finishes	Decorations	Emulsion paint to ceiling	m2	353.00	£11.00	A	5	E	5	10-15 years	£3,883.00	Cyclical redecorations	Redecorate					£3,883.00		£3,883.00
Internal	1	Bedrooms	0	Internal finishes	Decorations	Emulsion paint to ceiling	m2	353.00	£11.00	A	6	E	5	15-25 years	£3,883.00	Cyclical redecorations	Redecorate						£3,883.00	£3,883.00
Internal	1	Bedrooms	0	Internal finishes	Decorations	Emulsion paint to ceiling	m2	353.00	£11.00	A	6	E	5	15-25 years	£3,883.00	Cyclical redecorations	Redecorate						£3,883.00	£3,883.00
Internal	1	Bedrooms	0	Internal finishes	Decorations	Eggshell paint to walls	m2	1150.00	£11.00	B	3	H	5	3-5 years	£12,650.00	Generally good condition	Redecorate			£12,650.00				£12,650.00
Internal	1	Bedrooms	0	Internal finishes	Decorations	Eggshell paint to walls	m2	1150.00	£11.00	A	4	E	5	5-10 years	£12,650.00	Cyclical redecorations	Redecorate				£12,650.00			£12,650.00
Internal	1	Bedrooms	0	Internal finishes	Decorations	Eggshell paint to walls	m2	1150.00	£11.00	A	5	E	5	10-15 years	£12,650.00	Cyclical redecorations	Redecorate					£12,650.00		£12,650.00
Internal	1	Bedrooms	0	Internal finishes	Decorations	Eggshell paint to walls	m2	1150.00	£11.00	A	6	E	5	15-25 years	£12,650.00	Cyclical redecorations	Redecorate						£12,650.00	£12,650.00
Internal	1	Bedrooms	0	Internal finishes	Decorations	Eggshell paint to walls	m2	1150.00	£11.00	A	6	E	5	15-25 years	£12,650.00	Cyclical redecorations	Redecorate						£12,650.00	£12,650.00
Internal	1	Bedrooms	0	Internal finishes	Floor finishes	Carpet Tiles	m2	353.00	£59.00	B	3	H	10	3-5 years	£20,827.00	Generally fair condition	Replace			£20,827.00				£20,827.00
Internal	1	Bedrooms	0	Internal finishes	Floor finishes	Carpet Tiles	m2	353.00	£59.00	A	6	H	10	15-25 years	£20,827.00	Cyclical replacement	Cyclical replacement						£20,827.00	£20,827.00
Internal	1	Bedrooms	0	Door	Door	Solid veneer faced timber door (single) with vision panel	Item	40.00	£823.00	B	5	H	25	10-15 years	£32,920.00	Generally good condition	Replace					£32,920.00		£32,920.00
Internal	1	Storage	0	Internal finishes	Decorations	Emulsion paint to ceiling	m2	54.00	£11.00	B	3	H	5	3-5 years	£594.00	Generally good condition	Redecorate			£594.00				£594.00
Internal	1	Storage	0	Internal finishes	Decorations	Emulsion paint to ceiling	m2	54.00	£11.00	A	4	E	5	5-10 years	£594.00	Cyclical redecorations	Redecorate				£594.00			£594.00
Internal	1	Storage	0	Internal finishes	Decorations	Emulsion paint to ceiling	m2	54.00	£11.00	A	5	E	5	10-15 years	£594.00	Cyclical redecorations	Redecorate					£594.00		£594.00
Internal	1	Storage	0	Internal finishes	Decorations	Emulsion paint to ceiling	m2	54.00	£11.00	A	6	E	5	15-25 years	£594.00	Cyclical redecorations	Redecorate						£594.00	£594.00
Internal	1	Storage	0	Internal finishes	Decorations	Emulsion paint to ceiling	m2	54.00	£11.00	A	6	E	5	15-25 years	£594.00	Cyclical redecorations	Redecorate						£594.00	£594.00
Internal	1	Storage	0	Internal finishes	Decorations	Emulsion paint to walls	m2	165.00	£11.00	B	3	H	5	3-5 years	£1,815.00	Generally good condition	Redecorate			£1,815.00				£1,815.00
Internal	1	Storage	0	Internal finishes	Decorations	Emulsion paint to walls	m2	165.00	£11.00	A	4	E	5	5-10 years	£1,815.00	Cyclical redecorations	Redecorate				£1,815.00			£1,815.00
Internal	1	Storage	0	Internal finishes	Decorations	Emulsion paint to walls	m2	165.00	£11.00	A	5	E	5	10-15 years	£1,815.00	Cyclical redecorations	Redecorate					£1,815.00		£1,815.00
Internal	1	Storage	0	Internal finishes	Decorations	Emulsion paint to walls	m2	165.00	£11.00	A	6	E	5	15-25 years	£1,815.00	Cyclical redecorations	Redecorate						£1,815.00	£1,815.00
Internal	1	Storage	0	Internal finishes	Decorations	Emulsion paint to walls	m2	165.00	£11.00	A	6	E	5	15-25 years	£1,815.00	Cyclical redecorations	Redecorate						£1,815.00	£1,815.00
Internal	1	Storage	0	Internal finishes	Floor finishes	Carpet Tiles	m2	54.00	£95.00	B	3	H	10	3-5 years	£5,130.00	Generally fair condition	Replace			£5,130.00				£5,130.00
Internal	1	Storage	0	Door	Door	Solid veneer faced timber door (single) with vision panel	Item	12.00	£931.00	B	5	H	25	10-15 years	£11,172.00	Generally good condition	Replace					£11,172.00		£11,172.00

Condition Ranking **Priority** **Type**

ROOM DESCRIPTION				ROOM FABRIC			CONDITION SURVEY											PREDICTED REPLACEMENT (£1s)						Total
Internal / External	Building	Room No. / Name	Floor	Element	Element group	Sub element group	Unit rate	Item quantity	Standard Rate	CONDITION RANK	PRIORITY	TYPE	Typical Life from new (YEARS)	Estimated Remaining Useful Design Life (YEARS)	Cost	Disrepair Narrative / General Comments	Remedial Works	1	1-2	3-5	5-10	10-15	15-25	
																		Priority 1 - 2018/19	Priority 2 - 2019/20	Priority 3 - 2020/23	Priority 4 - 2023/28	Priority 5 - 2028/33	Priority 6 - 2033/42	Total
Internal	1	Laundry	G	Electrical Services	Sub-mains switchgear	Distribution Boards	Unit rate	1	£1,000.00	C	2	R	25	within 2 years	£1,000.00	Existing distribution boards to the Laundry to be replaced as panel is obsolete.	Replace the existing distribution boards with modern Schneider Acti9 distribution boards to match the ones already replaced.		£1,000.00					£1,000.00
Internal	1	Flats	1	Electrical Services	Sub-mains switchgear	Distribution Boards	Unit rate	1	£1,000.00	C	2	R	25	within 2 years	£1,000.00	The flat distribution board is an old Dorman Smith consumer unit which is now obsolete and should be replaced	Replace the board with a new consumer unit.		£1,000.00					£1,000.00
Internal	1	Amenity Area	G	Electrical Services	Sub-mains switchgear	Sub distribution wiring and containment systems	Unit rate	1	£3,000.00	C	2	R	25	within 2 years	£3,000.00	The existing building wiring was tested in August 2018 and appears to have past these tests, it was not clear from our visual inspection as to the age of the wiring and its overall condition.	As a minimum, repairs of the defects identified by the condition report should be carried out, but consideration should be given to rewiring the building.		£3,000.00					£3,000.00
Internal	1	1st Floor Flats	G	Electrical Services	Sub-mains switchgear	Sub distribution wiring and containment systems	Unit rate	1	£3,000.00	C	2	R	25	3 to 5 years	£3,000.00	The flat wiring is old and nearing the end of its life.	Rewire the 1st floor flats to the latest version of BS7671.			£3,000.00				£3,000.00
Internal	1	Bedrooms	G	Electrical Services	Lighting Systems	Emergency lighting (Inc. key switch)	Unit rate	40	£200.00	B	2	R	5	within 2 years	£8,000.00	Bedrooms should be provided with an emergency luminaire	Install a recessed anti-panic emergency luminaire with a new key test switch.		£8,000.00					£8,000.00
Internal	1	Bedrooms	G	Electrical Services	Lighting Systems	Lighting and luminaires (internal)	Unit rate	40	£40.00	B	2	R	20	within 2 years	£1,600.00	The existing bedroom pendant luminaire should be provided with a dimmable LED lamp and the general lighting supplemented with additional LED recessed down lighters to provide good light levels	Install new LED luminaires to allow for the residents to be able to read and for nursing staff/doctors to be able to carry out medical examinations in the bed rooms.		£1,600.00					£1,600.00
External	1	Walkways/escape routes	G	Electrical Services	Lighting Systems	Lighting and luminaires (external)	Unit rate	1	£12,500.00	C	2	R	20	within 2 years	£12,500.00	Around the external walkways there are emergency luminaires over the exit doors but there area areas of walkway with no illumination, general and emergency illumination should be installed especially where there is a change in direction or a very narrow walkway.	Install general external luminaires around the building to illuminate the escape routes, luminaires to be controlled by photocells and provided with 3 hour emergency battery back-up.		£12,500.00					£12,500.00
Internal	1	Bedrooms	G	Electrical Services	Lighting Systems	Lighting and luminaires (internal)	Unit rate	40	£100.00	C	2	R	20	Urgent	£4,000.00	Provision of table lamps in bedrooms	Place a table lamp in each bedroom	£4,000.00						£4,000.00
Internal	1	Bedrooms	G	Electrical Services	Lighting Systems	Lighting control and management systems	Unit rate	1	£3,000.00	B	2	R	20	3 to 5 years	£3,000.00	Light switches should be replaced with new switches with colour contrast colour plates and new dimmer switches for the pendant luminaire should be installed.	Replace the existing light switches with new switches.			£3,000.00				£3,000.00
Internal	1	Bedrooms	G	Electrical Services	Protection Systems	Fire Alarm Installations (Inc., call points, sounders and detection)	Unit rate	1	£7,500.00	C	2	R	25	Urgent	£7,500.00	The bedroom smoke detector should be replaced with a new addressable detector with a sounder and a beacon/VAD.	Replace the fire alarm system with a new addressable system.	£7,500.00						£7,500.00
Internal	1	Corridor	G	Electrical Services	Lighting Systems	Emergency lighting (Inc. key switch)	Unit rate	1	£10,000.00	C	2	R	25	Urgent	£10,000.00	The corridors should be provided with illuminated emergency exit signs and installed at all turns and exits from internal rooms.	A review of the current exit signage should be carried out and where the signs do not comply with BS5266, new signs should be installed.	£10,000.00						£10,000.00
Internal	1	Corridor	G	Electrical Services	Lighting Systems	Lighting and luminaires (internal)	Unit rate	1	£12,000.00	C	2	R	25	3 to 5 years	£12,000.00	The existing corridor and amenity area luminaires should be replaced with new LED luminaires to improve energy efficiency.	Install new LED luminaires.			£12,000.00				£12,000.00
Internal	1	Corridor	G	Electrical Services	Lighting Systems	Lighting control and management systems	Unit rate	1	£5,000.00	B	2	R	25	3 to 5 years	£5,000.00	The corridor lighting should be provided with a photocell lighting controls to make use of natural daylight.	All corridor lighting controls should be reviewed and where possible automatic lighting controls should be installed in the corridors.			£5,000.00				£5,000.00
Internal	1	Corridor	G	Electrical Services	Sub-mains switchgear	Switched socket outlet (SSO)	Unit rate	1	£5,000.00	B	2	R	25	3 to 5 years	£5,000.00	Existing small power outlet plates should be of a contrast colour to the walls.	All corridor small power accessories should be replaced with new accessories with a contrasting colour finish to the wall.			£5,000.00				£5,000.00
Internal	1	1st Floor Flats	G	Electrical Services	Sub-mains switchgear	Sub distribution wiring and containment systems	Unit rate	2	£4,000.00	B	2	R	25	3 to 5 years	£8,000.00	Flat wiring and accessories are nearing end of their life and need to be replaced	Rewire the two flats including new distribution boards, accessories and lighting.			£8,000.00				£8,000.00
Internal	1	Corridor	G	Electrical Services	Protection Systems	Fire Alarm Installations (Inc., call points, sounders and detection)	Unit rate	1	£10,000.00	C	2	R	25	Urgent	£10,000.00	The corridor smoke detector should be replaced with a new addressable detector with a sounder and a beacon/VAD.	Replace the fire alarm system with a new addressable system.	£10,000.00						£10,000.00
Internal	1	Boiler house	G	Mechanical Services	Heating Plant & Auxiliaries	Dosing Pots	Unit rate	5	£200.00	D	1	R	15	Urgent	£1,000.00	No dosing pots installed on heating systems.	Dosing pots to be installed on each heating system	£1,000.00						£1,000.00
Internal	1	Boiler house	G	Mechanical Services	Heating Plant & Auxiliaries	Magnetic Filters	Unit rate	5	£200.00	D	1	R	10	Urgent	£1,000.00	New boilers have been installed on existing old heating systems. Magnetic filters have been fitted in two of the boiler houses, the remainder should be installed to protect boilers/pumps	Magnetic filters to be installed on each heating system	£500.00						£500.00
Internal	1	Boiler house	G	Mechanical Services	Heating Plant & Auxiliaries	Pressure relief discharges/Tundish	Unit rate	15	£125.00	D	1	H	20	Urgent	£1,875.00	Many of the various pressure relief discharges do not discharge into tundishes but directly onto the floor. This is a health and safety hazard.	All discharges to terminate within a tundish and connected directly to a drain.	£1,875.00						£1,875.00
Internal	1	Boiler house	G	Mechanical Services	Heating Plant & Auxiliaries	Expansion Vessels	Unit rate	5	£250.00	D	1	R	15	Urgent	£1,250.00	Expansion vessels do not appear to have correct number of valves and drain off points. To be reviewed.	Expansion vessels need to be reviewed and valves drain off points installed if required.	£1,250.00						£1,250.00
Internal	1	Boiler house	G	Mechanical Services	Heating Distribution	Heating Services Thermal Insulation	Unit rate	5	£1,750.00	D	1	Q	30	Urgent	£1,750.00	Heating pipework within boiler houses have insulation to the majority of pipework, but there are a number of sections of missing insulation. All valves to be provided with insulated jackets	Install thermal insulation to all missing sections of pipework within boiler houses and install insulation jackets to all valves.	£1,750.00						£1,750.00
Internal	1	Throughout	G	Mechanical Services	Heating Distribution	Heating Distribution Pipework	Unit rate	1	£30,000.00	C	3	R	25	3 to 5 years	£30,000.00	Existing distribution is coming to end of life and is a one pipe heating circuit throughout.	Consideration should be given to replacing existing heating distribution system with a new 2 pipe VT heating distribution system. All pipework should be insulated throughout their length.			£30,000.00				£30,000.00
Internal	1	Throughout	G	Mechanical Services	Heating Distribution	Radiators	Unit rate	100	£500.00	C	3	R	20	3 to 5 years	£25,000.00	Some of the existing radiators are nearing their end of life and looking tired and outdated.	Consideration should be given to replacing the existing radiators with new LST radiators and thermostatic mixing valves to ensure that the heating system can operate correctly and be controllable.			£25,000.00				£25,000.00
Internal	1	Boiler house	G	Mechanical Services	Heating Controls	BMS	Unit rate	1	£10,000.00	C	3	R	20	3 to 5 years	£10,000.00	Existing controls are old and very basic	The existing basic controls should be considered to be replaced with a more energy efficient BMS system to control all heating and hot water systems.			£10,000.00				£10,000.00
Internal	1	Boiler house	G	Mechanical Services	Hot Water Plant & Equipment	Calorifiers	Unit rate	5	£2,000.00	B	3	R	20	3 to 5 years	£10,000.00	The calorifiers are coming to the end of their life and are no longer manufactured.	We would recommend to look at replacing the existing calorifiers with new more energy efficient models.			£10,000.00				£10,000.00
Internal	1	Throughout	G	Mechanical Services	Hot & Cold Water Distribution Services	Hot and Cold Water Pipework	Unit rate	1	£25,000.00	C	3	R	25	3 to 5 years	£25,000.00	Existing distribution is coming to end of life.	Replace existing hot and cold water distribution system with a new.			£25,000.00				£25,000.00
Internal	1	W.C.'s	G	Mechanical Services	Hot & Cold Water Distribution Services	Toilets	Unit rate	3	£400.00	B	2	R	25	within 2 years	£1,200.00	Existing black toilet cisterns may contain asbestos, also the overflow discharges onto the floor.	Replace black toilet cistern and toilets with new close coupled toilets with built in overflows.		£1,200.00					£1,200.00
Internal	1	W.C.'s	G	Electrical Services	Communication Services	Toilets	Unit rate	8	£300.00	C	2	R	25	3 to 5 years	£2,400.00	Wi-Fi access to the internet for all bedrooms	Install 2 No IT/Data cables from the data rack to each of the bedroom corridors and install a Wi-Fi module in each corridor.			£2,400.00				£2,400.00

Condition Ranking **Priority** **Type**

ROOM DESCRIPTION				ROOM FABRIC			CONDITION SURVEY											PREDICTED REPLACEMENT (£1s)						Total
Internal / External	Building	Room No. / Name	Floor	Element	Element group	Sub element group	Unit rate	Item quantity	Standard Rate	CONDITION RANK	PRIORITY	TYPE	Typical Life from new (YEARS)	Estimated Remaining Useful Design Life (YEARS)	Cost	Disrepair Narrative / General Comments	Remedial Works	1	1-2	3-5	5-10	10-15	15-25	
																		Priority 1 - 2018/19	Priority 2 - 2019/20	Priority 3 - 2020/23	Priority 4 - 2023/28	Priority 5 - 2028/33	Priority 6 - 2033/42	Total
Internal	1	Laundry	G	Mechanical Services	Mechanical Ventilation	Galvanised Ductwork Systems	Unit rate	1	£900.00	B	2	R	25	Urgent	£900.00	There is a possibility of lint build-up in the laundry dryers extract ductwork. It was not clear if it is possible to clean ducts.	Arrange where necessary for the installation of access panels in the duct and clean the ducts to remove any build-up of lint.	£900.00						£900.00
Internal	1	Main Entrance	G	Mechanical Services	Heating Distribution	Fan Convectors	Unit rate	1	£2,500.00	C	2	R	25	within 2 years	£2,500.00	Reception fan convector is in poor condition	Replace the existing fan convector with a new unit.		£2,500.00					£2,500.00
Internal	1	Boiler House	G	Electrical Services	Sub-mains switchgear	Sub distribution wiring and containment systems	Unit rate	1	£2,500.00	C	2	R	25	within 2 years	£350.00	Controls cabling within Blue wing boiler house very untidy and trunking lid missing.	The controls wiring in the blue wing boiler house needs tiding up and the trunking lid installed		£350.00					£350.00
Internal	1	Boiler house	G	Electrical Services	Protection Systems	Fire Alarm Installations (Inc., call points, sounders and detection)	Unit rate	1	£75.00	C	2	R	25	within 2 years	£75.00	Fire alarm detector hanging down supported by cables.	Re-fix the smoke detector to the soffit.		£75.00					£75.00
Internal	1	Sluice Rooms	G	Mechanical Services	Mechanical Ventilation	Local extract fans	Unit rate	4	£750.00	C	2	R	25	within 2 years	£3,000.00	No extract fans in the sluice rooms.	Install a trickle vent fan in the sluice rooms with a PIR to bring the fan up to full speed when a person enters the room.		£3,000.00					£3,000.00
External	1	Courtyard by delivery entrance		Mechanical Services	Mechanical Ventilation	Local extract fans	Unit rate	1	£500.00	B	2	R	25	3 to 5 years	£500.00	Cooking smells entering the building and courtyard by delivery entrance.	Review and modify the existing ductwork to reduce the smells entering the rooms when doors and windows are open.			£500.00				£500.00
																	Priority Totals	**£40,905.00**	**£171,586.00**	**£288,682.23**	**£257,898.23**	**£257,464.23**	**£284,594.46**	
																							Overall Total	**£1,301,130.15**

Item	Description of Work	Quantity	Unit	Cost	Total Cost
	Briar Close HOP - 25 Year Master Cost Plan				
1.00	**Preliminaries**	**1**	**Item**	**£0.00**	**£0.00**
2.00	**Ceilings**	**1**	**Item**	**£0.00**	**£0.00**
3.00	**External walls, windows & Doors**	**1**	**Item**	**£147,258.00**	**£147,258.00**
4.00	**Floors and Stairs**	**1**	**Item**	**£141,942.00**	**£141,942.00**
5.00	**Internal Walls & Doors**	**1**	**Item**	**£54,910.00**	**£54,910.00**
6.00	**Redecorations**	**1**	**Item**	**£257,235.15**	**£257,235.15**
7.00	**Roofs**	**1**	**Item**	**£354,625.00**	**£354,625.00**
8.00	**Sanitary Services**	**1**	**Item**	**£98,950.00**	**£98,950.00**
9.00	**Fixed Furniture and Fittings**	**1**	**Item**	**£4,250.00**	**£4,250.00**
9.00	**External Areas**	**1**	**Item**	**£30,060.00**	**£30,060.00**
10.00	**Mechanical Services**	**1**	**Item**	**£114,475.00**	**£114,475.00**
11.00	**Electrical Services**	**1**	**Item**	**£97,425.00**	**£97,425.00**
12.00	**Sub-total**				**£1,301,130.15**
13.00	Preliminaries People and Equipment (Based on 15%)				£195,169.52
14.00	Preliminaries Site Specific Costs (scaffold etc,,,)				£30,000.00

15.00	**Sub-total**				**£1,526,299.67**
16.00	Pre Construction costs:EMPA @ 3.25%				£0.00
17.00	**Sub-total**				**£1,526,299.67**
18.00	Contractor Management Fee @ 3.25%				£0.00
19.00	**Sub-total**				**£1,526,299.67**
20.00	Statutory and consultancy fees (includes Building Control, Building Surveyor, Building Services, surveys etc.) @ 15%				£228,944.95
21.00	**Sub-total**				**£1,755,244.62**
22.00	Risk Allowance @ 10%				£175,524.46
23.00	Client Contingency @10%				£175,524.46
24.00	**Sub-total**				**£2,106,293.55**
25.00	Professional fees, surveys and stat fees (15%)				£315,944.03
26.00	**Total Construction Cost (over 25 years)**				**£2,422,237.58**

Note: All costs to be read in conjunctions with the list of assumptions and clarifications as defined within the report, as well as the information detailed within the report wording.

Darren Blenkinsop

Managing Building Surveyor

Faithful+Gould
UK AND EUROPE

T +44 (0)115 957 4800
F +44 (0)115 957 4895
E darren.blenkinsop@fgould.com

FGOULD.COM